DRAFT UFC 4-022-02
August 2008

UNIFIED FACILITIES CRITERIA (UFC)

DRAFT

SELECTION AND APPLICATION OF VEHICLE BARRIERS

APPROVED FOR PUBLIC RELEASE; DISTRIBUTION UNLIMITED

UNIFIED FACILITIES CRITERIA (UFC)

DRAFT SELECTION AND APPLICATION OF VEHICLE BARRIERS

Any copyrighted material included in this UFC is identified at its point of use.
Use of the copyrighted material apart from this UFC must have the permission of the copyright holder.

U.S. ARMY CORPS OF ENGINEERS

NAVAL FACILITIES ENGINEERING COMMAND (Preparing Activity)

AIR FORCE CIVIL ENGINEER SUPPORT AGENCY

Record of Changes (changes are indicated by **1**\ ... /**1**/)

Change No.	Date	Location

This UFC supersedes MIL-HDBK-1013/14, dated 1 February 1999.

FOREWORD

The Unified Facilities Criteria (UFC) system is prescribed by MIL-STD 3007 and provides planning, design, construction, sustainment, restoration, and modernization criteria, and applies to the Military Departments, the Defense Agencies, and the DoD Field Activities in accordance with USD(AT&L) Memorandum dated 29 May 2002. UFC will be used for all DoD projects and work for other customers where appropriate. All construction outside of the United States is also governed by Status of Forces Agreements (SOFA), Host Nation Funded Construction Agreements (HNFA), and in some instances, Bilateral Infrastructure Agreements (BIA.) Therefore, the acquisition team must ensure compliance with the more stringent of the UFC, the SOFA, the HNFA, and the BIA, as applicable.

UFC are living documents and will be periodically reviewed, updated, and made available to users as part of the Services' responsibility for providing technical criteria for military construction. Headquarters, U.S. Army Corps of Engineers (HQUSACE), Naval Facilities Engineering Command (NAVFAC), and Air Force Civil Engineer Support Agency (AFCESA) are responsible for administration of the UFC system. Defense agencies should contact the preparing service for document interpretation and improvements. Technical content of UFC is the responsibility of the cognizant DoD working group. Recommended changes with supporting rationale should be sent to the respective service proponent office by the following electronic form: Criteria Change Request (CCR). The form is also accessible from the Internet sites listed below.

UFC are effective upon issuance and are distributed only in electronic media from the following source:

- Whole Building Design Guide web site http://dod.wbdg.org/.

Hard copies of UFC printed from electronic media should be checked against the current electronic version prior to use to ensure that they are current.

AUTHORIZED BY:

JAMES C. DALTON, P.E. Chief, Engineering and Construction U.S. Army Corps of Engineers	JOSEPH E. GOTT, P.E. Chief Engineer Naval Facilities Engineering Command
PAUL A. PARKER The Deputy Civil Engineer DCS/Installations & Logistics Department of the Air Force	PETER POTOCHNEY. Acting Director, Installations Requirements and Management Office of the Deputy Under Secretary of Defense (Installations and Environment)

UNIFIED FACILITIES CRITERIA (UFC)
NEW DOCUMENT SUMMARY SHEET

Document: UFC 4-022-02, Selection and Application of Vehicle Barriers
Superseding: Military Handbook 1013/14, Selection and Application of Vehicle Barriers

Description: Provides a unified approach for the design, selection, and installation of active and passive vehicle barriers associated with Department of Defense (DoD) facilities. The example provided in this UFC are for illustration only and shall be modified and adapted to satisfy installation specific constraints. This UFC is not intended to address procedural issues such as threat levels or to provide specific design criteria such as impact forces.

This UFC was developed by consolidating and refining criteria from USCE Protective Design Center, Security Engineering Working Group (SEWG); Naval Facilities Engineering Command (NAVFACENGCOM), Engineering Criteria Office, and available military, government, and commercial sources that are listed in Appendix B of this UFC.

Commanders, security and antiterrorism personnel, planners, designers, architects, and engineers should use this UFC when evaluating existing and providing new vehicle barriers. Technical information considered generally known to professional designers, architects, engineers, or readily available in technical references (UFC, Military Handbooks, Technical Manuals, etc.) has not been included.

Reasons for Document: Vehicle barriers are primarily used as one of many elements that define perimeters that require a final denial barrier to be provided for certain restricted areas. This UFC focuses of the design, selection, and application of active and passive vehicle barriers.

Impact: The following direct benefits will result:

- A standardized approach for identifying and justifying security and antiterrorism design criteria for DoD facilities;
- A standardized nomenclature and criteria for asset, threat, and level of protection definition;
- A standardized procedure for identifying costs for DoD facilities with security and antiterrorism requirements to a planning level of detail;
- A standardized process for evaluating design criteria and protection options based on cost and risk management;
- Guidance for incorporating security and antiterrorism principles into installation master planning; and
- There are no adverse impacts on environmental, sustainability, or constructability policies or practices.

CONTENTS

CHAPTER 1 INTRODUCTION 1

1-1 **PURPOSE**. 1
1-2 **INTRODUCTION**. 1
1-3 **BACKGROUND**. 1
1-4 **SCOPE AND USE OF GUIDANCE**. 1
1-5 **SECURITY ENGINEERING UFC SERIES**. 2

CHAPTER 2 EXISTING REQUIREMENTS AND TECHNICAL GUIDANCE 4

2-1 **GENERAL**. 4
2-2 **DOD REQUIREMENTS**. 4
2-2.1 **DOD 5200.8-R Physical Security Program**. 5
2-2.2 **DOD 2000.12 DOD Antiterrorism (AT) Program**. 5
2-2.3 **DOD 2000.16 DOD Antiterrorism Standards**. 5
2-2.4 **UFC 4-010-01 DOD Minimum Antiterrorism Standards for Buildings**. 5
2-2.5 **UFC 4-022-01 Security Engineering: Entry Control Facilities/Access Control Points**. 5
2-2.6 **UFC 4-022-03 Security Engineering: Fences, Gates and Guard Facilities**. 5
2-3 **SERVICE REQUIREMENTS**. 6
2-3.1 **Department of the Air Force**. 6
2-3.2 **Department of the Army**. 6
2-3.3 **Department of the Navy**. 6
2-3.4 **Department of the Navy – Marine Corps**. 6
2-4 **COMBATANT COMMANDER REQUIREMENTS**. 7
2-5 **INSTALLATION SPECIFIC REQUIREMENTS**. 7
2-6 **ADDITIONAL REFERENCES**. 7
2-7 **REFERENCE WEBSITES**. 7

CHAPTER 3 DEFINITIONS 9

3-1 **ACRONYMS**. 9

CHAPTER 4 VEHICLE BARRIER DESIGN PARAMETERS 10

4-1 **GENERAL**. 10
4-2 **SITE SURVEY**. 10
4-3 **INTEGRATED PHYSICAL SECURITY SYSTEM**. 13
4-4 **ATTAINABLE VEHICLE SPEED**. 13
4-4.1 **Attainable Vehicle Speed on a Straight Path**. 14
4-4.2 **Attainable Vehicle Speed on a Curved Path**. 18
4-4.3 **Attack Routes Parallel to the Barrier**. 20
4-5 **VEHICLE KINETIC ENERGY**. 23

CHAPTER 5 VEHICLE BARRIER SELECTION, DESIGN, AND INSTALLATION 25

5-1 **VEHICLE BARRIER TYPES**. 25
5-1.1 **Active Barrier Systems**. 25
5-1.2 **Passive Barrier Systems**. 25
5-1.3 **Fixed Barrier Systems**. 25
5-1.4 **Portable/Movable Barrier Systems**. 25

5-2 **DESIGN CONSIDERATIONS**. 25
5-2.1 **Fencing**. 31
5-2.2 **Location**. 32
5-2.3 **Aesthetics**. 32
5-2.4 **Safety**. 32
5-2.5 **Security**. 33
5-2.6 **Reliability**. 33
5-2.7 **Maintainability**. 34
5-2.8 **Cost**. 34
5-2.9 **Barrier Operations**. 34
5-2.10 **Unobstructed Space**. 35
5-2.11 **Environment**. 35
5-2.12 **Installation Requirements**. 35
5-2.13 **Facility Compatibility**. 35
5-2.14 **Operator Training**. 35
5-2.15 **Options**. 36
5-2.16 **Operational Cycle**. 36
5-2.17 **Methods of Access Control**. 36
5-2.18 **Cost Effectiveness**. 37
5-2.19 **Liabilities**. 37
5-3 **ADDITIONAL DESIGN CONSIDERATIONS**. 37
5-4 **BARRIER CAPABILITY**. 38
5-5 **VEHICLE BARRIER CERTIFICATION**. 39

CHAPTER 6 ACTIVE AND PASSIVE BARRIERS 41

6-1 **ACTIVE BARRIER SYSTEMS**. 41
6-1.1 **Portable Vehicle Barriers**. 41
6-1.2 **High-Security Barricade System**. 45
6-1.3 **Bollard System**. 47
6-1.4 **Crash Beam Barrier System**. 48
6-1.5 **Crash Gate System**. 50
6-1.6 **Ground Retractable Automobile Barrier (GRAB)**. 51
6-1.7 **Maximum Security Barrier (MSB)**. 51
6-2 **PASSIVE BARRIER SYSTEMS**. 53
6-2.1 **Concrete-Filled Bollard**. 54
6-2.2 **Concrete Median**. 57
6-2.3 **King Tut Blocks**. 58
6-2.4 **Concrete Planter**. 60
6-2.5 **Excavations and Ditches**. 60
6-2.6 **Guardrails**. 65
6-2.7 **Heavy Equipment Tires**. 66
6-2.8 **Tire Shredders**. 67
6-2.9 **Steel Cable Barriers**. 68
6-2.10 **Steel Cable-Reinforced Chain Link Fencing**. 69
6-2.11 **Reinforced Concrete Knee Walls**. 71
6-2.12 **Plastic Barrier Systems**. 74
6-2.13 **Expedient Barrier Systems**. 75
6-3 **VEHICLE BARRIER PERFORMANCE**. 75

APPENDIX A REFERENCES 77

APPENDIX B LIST OF MANUFACTURERS 79

B-1 **SCOPE**. 79
B-2 **DEFINITIONS**. 79
B-3 **MANUFACTURERS OF ACTIVE BARRIERS**. 79
B-4 **COST**. 79
B-6 **MANUFACTURERS OF PASSIVE BARRIERS**. 87

APPENDIX C COST DATA 89

C-1 **SCOPE**. 89
C-2 **NON-GOVERNMENT PUBLICATIONS**. 89
C-3 **DEFINITIONS**. 89
C-4 **ACTIVE BARRIERS**. 89
C-4.1 **DoS Ratings for Active Barriers**. 89
C-4.2 **Cost Data for Active Barriers**. 89
C-5 **COST DATA FOR PASSIVE BARRIERS**. 94

APPENDIX D PERFORMANCE DATA FOR ACTIVE AND PASSIVE VEHICLE BARRIERS 95

D-1 **SCOPE**. 95
D-2 **DEFINITIONS**. 95
D-3 **ACTIVE BARRIERS**. 95
D-4 **PASSIVE BARRIERS**. 98

APPENDIX E EXAMPLES FOR PROTECTION AGAINST TERRORIST VEHICLE BOMBS 99

E-1 **SCOPE**. 99
E-2 **NON-GOVERNMENT PUBLICATIONS**. 99
E-3 **DEFINITIONS**. 99
E-4 **EXAMPLES**. 99
E-4.1 **Example 1**. 99
E-4.2 **Example 2**. 102

APPENDIX F VEHICLE BARRIER DEBRIS MINIMIZATION AND EFFECTS ON COUNTER-MOBILITY 103

F-1 **GENERAL**. 103
F-2 **BARRIER RESPONSE TO EXPLOSIVE LOAD TESTING**. 103
F-3 **LOW-DEBRIS BARRIER COUNTER-MOBILITY EVALUATION**. 105
F-4 **RESTORATION OF DAMAGED BARRIERS**. 107

FIGURES

Figure 4-1 Example Site Layout 12
Figure 4-2 Integrated Physical Security System 13
Figure 4-3 Vehicle Speed vs. Acceleration Distance 15
Figure 4-4 Speed Correction Factor for Vehicles Driving on a Sloped Path 17
Figure 4-5 Skid Speed vs. Radius of Curvature 19

Figure 4-6 Correction Factor for Vehicle Traveling Parallel to Barrier (Based on Coefficient of Friction, f = 0.5) 21
Figure 4-7 Correction Factor for Vehicle Traveling Parallel to Barrier (Based on Coefficient of Friction, f = 0.9) 22
Figure 6-1 Vehicle Surface Barrier (Example 1) 43
Figure 6-2 Portable High Security Anti-Terrorist Vehicle Crash Barrier (Example 2) ... 44
Figure 6-3 Portable Barrier (Example 3) 44
Figure 6-4 Maximum Security Vehicle Arrest Barrier (Example 4) 44
Figure 6-5 Example High-Security Barricade System (Wedge Type) 45
Figure 6-6 Example High-Security Barricade System (Flush-Mounted) 46
Figure 6-7 Example Bollard System 48
Table 6-3 Performance Data for Example Bollard System 48
Figure 6-8 Cable-Reinforced Crash Beams 49
Figure 6-9 Example Linear Crash Gate 50
Figure 6-10 Example MSB Vehicle Barrier (Lift Plate Barricade System) 52
Figure 6-11 Second Example MSB Vehicle Barrier 53
Figure 6-12 DOS Passive Anti-Ram Bollard Example 55
Figure 6-13 Example Bollard Design Section 56
Figure 6-14 Bollard Design Example Layout in Plan View 56
Figure 6-15 Precast Non-Reinforced Concrete Median 58
Figure 6-16 Concrete Blocks 59
Figure 6-17 Reinforced Concrete Planter 60
Figure 6-18 Anti-Vehicular Ditch Profile with Incline Slope Requiring Stabilization 62
Figure 6-19 Anti-Vehicular Ditch Profile with Maximum Incline Slope Not Requiring Stabilization 62
Figure 6-20 Anti-Vehicular Ditch Profile with Maximum Incline Slope Not Requiring Stabilization or Berm 63
Figure 6-21 Simulated Trajectory Path and Impact Angle with Ditch Incline Slope for Vehicle at Two Speeds 63
Figure 6-22 Lower Bumper Reference Line and Vehicle Approach Angle 64
Figure 6-23 Guardrails 66
Figure -6-24 Heavy Equipment Tire Barrier 67
Figure 6-25 Tire Shredders 68
Figure 6-26 Steel Cable Barriers 69
Figure 6-27 Typical Steel Cable Reinforced Chain-Link Fencing 70
Figure 6-28 Anti-Ramming Foundation Wall 72
Figure 6-29 Anti-Ramming Knee Wall Section 73
Figure 6-30 Reinforced Concrete Knee Wall Details 74
Figure 6-31 Commercially Available Plastic Barrier System 75
Figure E-4 Site Plan for Examples 101
Figure F-5 Hesco Bastion Concertainer Barrier, Oblique View 106
Figure F-6 Polymer-Coated, Lightweight Concrete Barrier System 107

TABLES

Table 4-1 Speed Correction Factor for a Vehicle Traveling Parallel to Barrier (Based on Friction Coefficient = 1.0) 23
Table 4-2 Kinetic Energy Developed by Vehicle, ft-lbf (kgf-m) x 1,000 24

Table 6-1 Performance Data for Portable Vehicle Barriers 43
Table 6-2 Performance Data for Example High-Security Barricade System 47
Table 6-4 Performance Data for Cable-Reinforced Crash Beams 49
Table 6-5 Performance Data for Example Linear Crash Gate 51
Table 6-6 Performance Data for MSB Vehicle Barriers 53
Table 6-7 Separation Distance (D)* for Barriers to Reduce Speed on a Straight Path in Ft (m) 59
Table 6-8 Maximum Vehicle Approach Angles and Side Slope Angles 64
Table 6-9 Performance of Cable Restraint Systems 71
Table B-2. DoS CERTIFIED ANTI-RAM VEHICLE BARRIERS 80
Table C-3 DoS Ratings* 89
Table C-4 Manufacturer's Data and Cost for Certified Active Barriers 91
Table C-5 Cost for Passive Barriers 94
Table D-6 Performance for Active Barriers 96
Table D-7 Performance for Passive Barriers 98

CHAPTER 1 INTRODUCTION

1-1 PURPOSE.

This UFC provides the design requirements necessary to plan, design, construct, and maintain vehicle counter-mobility barriers used within Entry Control Facilities (ECF) or as perimeter protection. This UFC is to be used during the design of Department of Defense (DoD) facilities to ensure an optimal vehicle barrier system is selected by engineers and security personnel for a specific operation within an installation. Barrier performance, maintenance, and cost should all be optimized. It is intended to establish consistent requirements, standards, and design basis for barrier planning, design, construction, and maintenance for all military departments. This UFC identifies design features necessary to ensure that infrastructure constructed today will have the flexibility to support future technologies, a changing threat environment, and changes in operations.

1-2 INTRODUCTION.

A vehicle barrier selection and placement process is presented herein, along with criteria for the design, selection, installation, operation, and maintenance of security barrier systems. The selected barrier system must effectively stop and/or disable vehicles that pose a threat, including explosive laden vehicles, of breaching the perimeter of a protected area. Both passive (static or non-movable) perimeter barriers and active (operational for access control) barriers at facility entrances are included. The examples presented in this UFC are for illustration purposes only and should be modified and adapted to satisfy installation specific constraints. This UFC is not intended to address procedural issues such as tactics and techniques; however, an appropriately designed vehicle barrier system used within an ECF/ACP or along an installation perimeter can enhance and improve operations.

1-3 BACKGROUND.

Guidance and documentation regarding issues of vehicle barriers and vehicle counter-mobility design are provided within the joint military services. Each document presents useful information to engineers, planners, architects, and security personnel responsible for Entry Control Facilities (ECFs) and Access Control Points (ACPs), both existing and new facility construction involving vehicle barriers and counter-mobility techniques.

Until now, there has been no single DoD document that provides all the information required for vehicle barrier design. This UFC, in conjunction with UFC 4-022-01 for Entry Control Facilities/Access Control Points, establishes consistent standards and requirements for each military service branch. The UFC supplements and is referenced by the Security Engineering Facility Planning Manual (UFC 4-020-01) and the Security Engineering Facility Design Manual (UFC 4-020-02). The design of a vehicle barrier system should begin with planning as directed in UFC 4-020-01, then graduate to design guidance provided in UFC 4-020-02, then culminate with selection and installation of a barrier system using this UFC.

1-4 SCOPE AND USE OF GUIDANCE.

Commanders, security personnel, planners, designers, and engineers should use this UFC when designing vehicle barrier systems for ECFs or other perimeter locations. Technical information considered generally known to professional designers or engineers or readily available in existing technical references (Unified Facility Criteria, Military Handbooks, Technical Manuals, etc.) has not been included.

1-5 SECURITY ENGINEERING UFC SERIES.

This UFC is one of a series of security engineering Unified Facilities Criteria documents that cover minimum standards, planning, preliminary design, and detailed design for security and antiterrorism. The manuals in this series are designed to be used sequentially by a diverse audience to facilitate development of projects throughout the design cycle. The manuals in this series include the following:

a. DoD Minimum Antiterrorism Standards for Buildings. UFC 4-010-01 DoD Minimum Antiterrorism Standards for Buildings and UFC 4-010-02 DoD Minimum Antiterrorism Standoff Distances for Buildings establish standards that provide minimum levels of protection against terrorist attacks for the occupants of all DoD inhabited buildings. Those UFC are intended to be used by security and antiterrorism personnel and design teams to identify the minimum requirements that must be incorporated into the design of all new constructions and major renovations of inhabited DoD buildings. They also include recommendations that should be, but are not required to be, incorporated into all such buildings.

b. Security Engineering Facilities Planning Manual. UFC 4-020-01 *Security Engineering Facilities Planning Manual* presents processes for developing the design criteria necessary to incorporate security and antiterrorism into DoD facilities and for identifying the cost implications of applying those design criteria. Those design criteria may be limited to the requirements of the minimum standards, or they may include protection of assets other than those addressed in the minimum standards (people), aggressor tactics that are not addressed in the minimum standards, or levels of protection beyond those required by the minimum standards. The cost implications for security and antiterrorism are addressed as cost increases over conventional construction for common construction types. The changes in construction represented by those cost increases are tabulated for reference, but they represent only representative construction that will meet the requirements of the design criteria. The manual also includes a means to assess the tradeoffs between cost and risk. The Security Engineering Planning Manual is intended to be used by planners as well as security and antiterrorism personnel with support from planning team members.

c. Security Engineering Facilities Design Manual. UFC 4-020-02 *Security Engineering Facilities Design Manual* provides interdisciplinary design guidance for developing preliminary systems of protective measures to implement the design criteria established using UFC 4-020-01. Those protective measures include building and site elements, equipment, and the supporting manpower and procedures necessary to make them all work as a

system. The information in UFC 4-020-02 is in sufficient detail to support concept level project development, and as such can provide a good basis for a more detailed design. The manual also provides a process for assessing the impact of protective measures on risk. The primary audience for the Security Engineering Facility Design Manual is the design team, but it can also be used by security and antiterrorism personnel.

d. Security Engineering Support Manuals. In addition to the standards, planning, and design UFC mentioned above, there is a series of additional UFC that provide detailed design guidance for developing final designs based on the preliminary designs developed using UFC 4-020-02. These support manuals provide specialized, discipline specific design guidance. Some address specific tactics such as direct fire weapons, forced entry, or airborne contamination. Others address limited aspects of design such as resistance to progressive collapse or design of portions of buildings such as mailrooms. Still others address details of designs for specific protective measures such as vehicle barriers or fences. The Security Engineering Support Manuals are intended to be used by the design team during the development of final design packages.

CHAPTER 2 EXISTING REQUIREMENTS AND TECHNICAL GUIDANCE

2-1 GENERAL.

This UFC should be used in conjunction and coordination with UFC 4-020-01 Security Engineering Facilities Planning Manual, UFC 4-020-02 Security Engineering Facilities Design Manual, UFC 4-022-01 Security Engineering: Entry Control Facilities/Access Control Points, and UFC 4-022-03 Security Engineering: Fences, Gates and Guard Facilities to guide the user through a selection process to establish a protective barrier system around a DoD installation and designated restricted areas within the installation (enclave areas). A systematic approach is used. The main issues to be considered during the selection and design of a vehicle barrier include:

a. *Threat Analysis* – to quantify the potential threat. For threat analysis, refer to UFC 4-020-01 Security Engineering Facilities Planning Manual and UFC 4-020-02 Security Engineering Facilities Design Manual. The procedures in these manuals will quantify and qualify all potential threats, including the "moving" vehicle bomb threat necessary for the determination of the appropriate vehicle barrier for a given location.

b. *Performance* – to determine the appropriate levels of protection (both to personnel and property). An acceptable level of protection must be defined by the installation commander.

c. *Access Control Measures* – physical controls, operating procedures, hardware and software features used in various combinations to allow, detect, or prevent access.

d. *Requirements* – appropriate standoff distance to maintain a level of protection compatible with operational needs; passive or active barrier systems to stop the threat vehicle; barrier reliability and maintainability, safety, sabotage and malfunction protection, and cost effectiveness.

e. *Response* – potential structural damage to the vehicle barrier from blast loads produced during an explosion.

f. *Liabilities* – potential liability effects on the decision to protect assets against the effects of a terrorist act.

g. *Cost* – security expenditures based on the value of the asset to be protected and the importance of the asset to national security and readiness. For protection against vehicle bombs, the potential loss of human life generally drives the cost of security, overriding the value of the property to be protected. The decision to use vehicle barriers and provide protection against terrorist vehicle bombs is primarily motivated by protection of personnel.

2-2 DOD REQUIREMENTS.

There are several instructions and publications within the Department of Defense that establish protective vehicle barrier requirements, integration of barriers into access control procedures, and the responsibility for the selection, operation, and maintenance of barriers used in perimeter control.

2-2.1 **DOD 5200.8-R Physical Security Program**.

This regulation requires DOD Components to determine the necessary access control based on the requirements of a developed physical security program. It also requires the evaluation of automated entry control systems or access devices, where necessary.

2-2.2 **DOD 2000.12 DOD Antiterrorism (AT) Program**.

This directive provides DOD policies for AT and assigns responsibilities for implementing the procedures for the DOD AT Program. It authorized the publication of DOD O-2000.16 as the DOD standards for AT and DOD O-2000.12-H *DOD Antiterrorism Handbook* as guidance for the DOD standards.

2-2.3 **DOD 2000.16 DOD Antiterrorism Standards**.

This instruction and service directive requires the installation or activity Commanding Officer to define the access control measures at installations.

2-2.4 **UFC 4-010-01 DOD Minimum Antiterrorism Standards for Buildings**.

This UFC was issued under the authority of DOD 2000.16, which requires DOD Components to adopt and adhere to common criteria and minimum construction standards to mitigate antiterrorism vulnerabilities and terrorist threats. The minimum standards are based on the assumption that larger amounts of explosive will be detected and denied entry at the controlled perimeter of an installation. It is critical that the vehicle barriers used at the ECF and other perimeter protection locations are capable of that mission.

2-2.5 **UFC 4-022-01 Security Engineering: Entry Control Facilities/Access Control Points**.

UFC 4-022-01 is to be used in conjunction with this UFC and UFC 4-022-03 *Security Engineering: Fences, Gates and Guard Facilities* to design primary and secondary ECFs at an installation. It presents a unified approach to the design of ECFs, encompassing the overall layout, organization, infrastructure, and facilities of an access control point. The UFC identifies design features necessary to ensure that infrastructure constructed today will be able to support future technologies, a changing threat environment, and operational changes.

2-2.6 **UFC 4-022-03 Security Engineering: Fences, Gates and Guard Facilities**.

UFC 4-022-03 is to be used in conjunction with this UFC and UFC 4-022-01 to select and design fence and gate systems and guard facilities to be used in ECFs or other

designated installation perimeter areas to be protected. Fences, gates, and guard facilities are installed to define the perimeter of a restricted area, provide a physical and psychological deterrent to entry, optimize security force operations, enhance detection of intruders, and control the flow of personnel and vehicles through designated portals. The UFC defines requirements for installation and implementation of fences, gates, and guard facilities within DOD facilities.

2-3 SERVICE REQUIREMENTS.

2-3.1 Department of the Air Force.

Air Force Security Forces and the Air Force Center for Environmental Excellence Design group released the *Entry Control Facilities Design Guide* in February 2003. The AFCEE *Entry Control Facilities Design Guide* served as a basis for the development of this UFC.

The United States Air Force (USAF) *Vehicle Bomb Mitigation Guide* provides technical guidance on selection and design of vehicle barrier systems for mitigating effects of vehicle bombs detonating within an ECF. The guide presents ready reference materials associated with planning and executing operations to protect assets against the threat of vehicle bombs. It presents lessons learned from several USAF initiatives: “Barrier Assessment for Safe Standoff (BASS)”, “Barriers Counter-mobility Evaluation”, and “Vehicle Impact Evaluation of Reduced-debris, Counter-mobility Barriers”.

Apply the requirements of any previous design guides and this UFC to ensure the more stringent design criteria is incorporated in the project.

2-3.2 Department of the Army.

Requirements concerning physical security can be found in Army Regulation (AR) 190-13, *Army Physical Security Program* and Army Access Control Points, Standards Definitive Design; December 2004, prepared by United States Army Corps of Engineers (USACE), Protective Design Center, Omaha District (https://pdc.usace.army.mil/library/drawings/acp).

2-3.3 Department of the Navy.

OPNAV 5530.14D *Navy Physical Security and Law Enforcement Manual*, Chapter 10, identifies the requirements for installation access and circulation control. In addition to this document and OPNAV 5530.14D, UG-2031-SHR *User’s Guide: Protection Against Terrorist Vehicle Bombs*, Chapter 5, provides supplemental processes needed to make informed decisions for protection of assets from vehicle bombs. These documents are intended to be used by the security professional to assist in the selection of vehicle barriers, as well as in decisions about standoff distances, mitigation measures, structural hardening, and glazing.

2-3.4 Department of the Navy – Marine Corps.

MCO P5530.14A *Marine Corps Physical Security Program Manual* provides guidance on the requirements for installation perimeter barriers, access control, and protective lighting.

2-4 COMBATANT COMMANDER REQUIREMENTS.

Some combatant commanders have issued requirements for vehicle barrier selection and entry control procedures for installations within their area of responsibility. Ensure any such requirements are incorporated in addition to the requirements found in this UFC. Resolve any differences in the requirements for the selection and application of a vehicle barrier system by applying the most stringent requirement.

2-5 INSTALLATION SPECIFIC REQUIREMENTS.

As required by DOD 2000.16 and service directives, each installation will have an Antiterrorism Plan. The plan provides procedures and recommendations for reducing risk and vulnerability of DOD personnel, their families, facilities, and assets from acts of terrorism.

2-6 ADDITIONAL REFERENCES.

Other documents, drawings, and publications that could contribute to the guidance provided in this UFC are listed below.

NAVFAC P397/TM-5-1300/AF4 88-22	Structures to Resist the Effects of Accidental Explosions
PDC-TR90-2	Barrier Impact Response Model 3 Dimension (BIRM 3D)
SD-STD-02.1, Revision A	Specification for Vehicle Crash Test of Perimeter Barriers and Gates
UFGS 34 17 13.19	Unified Facilities Guide Specification, Active Vehicle Barriers
UFGS 12 93 00	Unified Facilities Guide Specification, Site Furnishings
ASTM F 2656-07	Standard Test Method for Vehicle Crash Testing of Perimeter Barriers

Means, R.S., “Building Construction Cost Data”, 61st Edition, 2003 (Copies can be ordered from the R.S. Means website: http://www.rsmeans.com)

2-7 REFERENCE WEBSITES.

Copies of many of the documents referenced in this chapter can be obtained from the following websites.

a. Whole Building Design Guide web site http://www.wbdg.org/references/pa_dod.php (See Service Specific information on the right hand side of the website.)

b. United States Army Corps of Engineers (USACE), Protective Design Center, Omaha District (https://pdc.usace.army.mil/library/drawings/acp)

CHAPTER 3 DEFINITIONS

3-1 ACRONYMS.

The acronyms used in this UFC are defined below.

a) BDAM	-	Blast Damage Assessment Model
b) CCTV	-	Closed-Circuit Television
b) DOD	-	Department of Defense
c) DODISS	-	DOD Index of Specifications and Standards
d) DOS	-	Department of State
e) ERASDAC	-	Explosive Risk and Structural Damage Assessment Code
f) FACEDAP	-	Facility and Component Explosive Damage Assessment Program
g) FRF	-	Fragment-Retention Film
h) MIL-HDBK	-	Military Handbook
i) NAVFAC	-	Naval Facilities Engineering Command
j) NFESC	-	Naval Facilities Engineering Service Center
k) PDC	-	Protective Design Center

CHAPTER 4 VEHICLE BARRIER DESIGN PARAMETERS

4-1 GENERAL.

Vehicles loaded with explosives can detonate as a large bomb, inflicting severe damage on critical military facilities and potentially injuring DoD personnel. Such vehicle bombs are effective terrorist tools because they facilitate the transport of large quantities of explosives to any desired location. When planning and selecting vehicle barriers to be used for facility perimeter protection, the first step is to determine the Design Basis Threat (DBT) for any given location in the facility. 0, Table D-5provides active vehicle barrier kinetic energy rating and vehicle penetration based on the SD-STD-02.1 Revision A test standard. The DBT may vary within and around the installation. It can be affected by guidance instructions specific to the area and service specific guidance. UFC 4-010-01 *DoD Minimum Antiterrorism Standards for Buildings* , as well as local and service specific guidance documents, should be consulted in defining Design Basis Threats at each location where barriers are required.

Several factors should be considered when setting up defense against the DBT: (1) the occupied structures in a particular area; (2) the barrier penetration capabilities of the DBT vehicle (based on the maximum vehicle velocity to the barrier location, the angle of impact, and the area around the barrier location); and (3) the structural response of and potential debris throw from the barrier, if the vehicle bomb detonates.

Both stationary and moving vehicle bombs need to be considered. To effectively prevent a moving vehicle from getting close to the intended target, the perimeter barrier must absorb the kinetic energy produced by the total weight of the vehicle bomb (vehicle weight plus the weight of explosives and any other cargo in the vehicle) and the vehicle's maximum attainable speed at the point of impact. Thus, kinetic energy is a primary factor used to establish performance requirements for moving vehicle barriers.

Another primary consideration for either stationary or moving vehicle bombs should be the barrier's response to the load produced by detonation of the explosives in the vehicle. The amount of debris produced and subsequent debris throw distance should also factor into the selection of appropriate barriers.

4-2 SITE SURVEY.

The process of selecting and designing a barrier system begins with determination of the Design Basis Threat (DBT) and required levels of protection. Reference UFC 4-020-01 *Security Engineering Facilities Planning Manual* and UFC 4-020-02 *Security Engineering Facilities Design Manual* for methods to determine the DBT and levels of protection. Next, preparations are made for a site survey. First, a scaled map of the protected area must be prepared from detailed plans of the facility that must include at least one block beyond the perimeter. This map should include the relative locations, major dimensions and descriptions of structures, roads, terrain and landscaping, existing security features, and property perimeter. Any features outside the perimeter (within one block or so) that could possibly be used to reduce vehicle speed, prevent access to the perimeter barrier, shield structures from damage in the event of an explosion, or affect an aggressor's progress in any other way should be shown on the

site map as well. This map will permit careful analysis of distances and topographical features between the perimeter and the facility. The map identifies potential vulnerabilities. Due to the information included on any such site map, it may need to be a classified document. **Error! Reference source not found.** shows an example site map for a facility.

As shown in **Error! Reference source not found.**, the individual segments of the perimeter can be attacked from a variety of paths. For example, for Building 827 with a controlled area on two sides of the perimeter, the two remaining sides (Perimeter Roads “A” and “B”) are vulnerable to a vehicle attack. The Entrance Road and the extension of Perimeter Road “B" are perpendicular and lead directly to the compound boundary. Each of these roads is a potential attack path. Certain segments of the perimeter can be attacked from more than one street. In addition, for Perimeter Roads “A” and “B”, running parallel to the perimeter, there are an infinite number of impact points and angles depending upon vehicle location and speed. As a result, a large number of potential impact conditions (the combination of vehicle speed and impact angle) can occur at any point along the perimeter boundary.

Figure 4-1 Example Site Layout

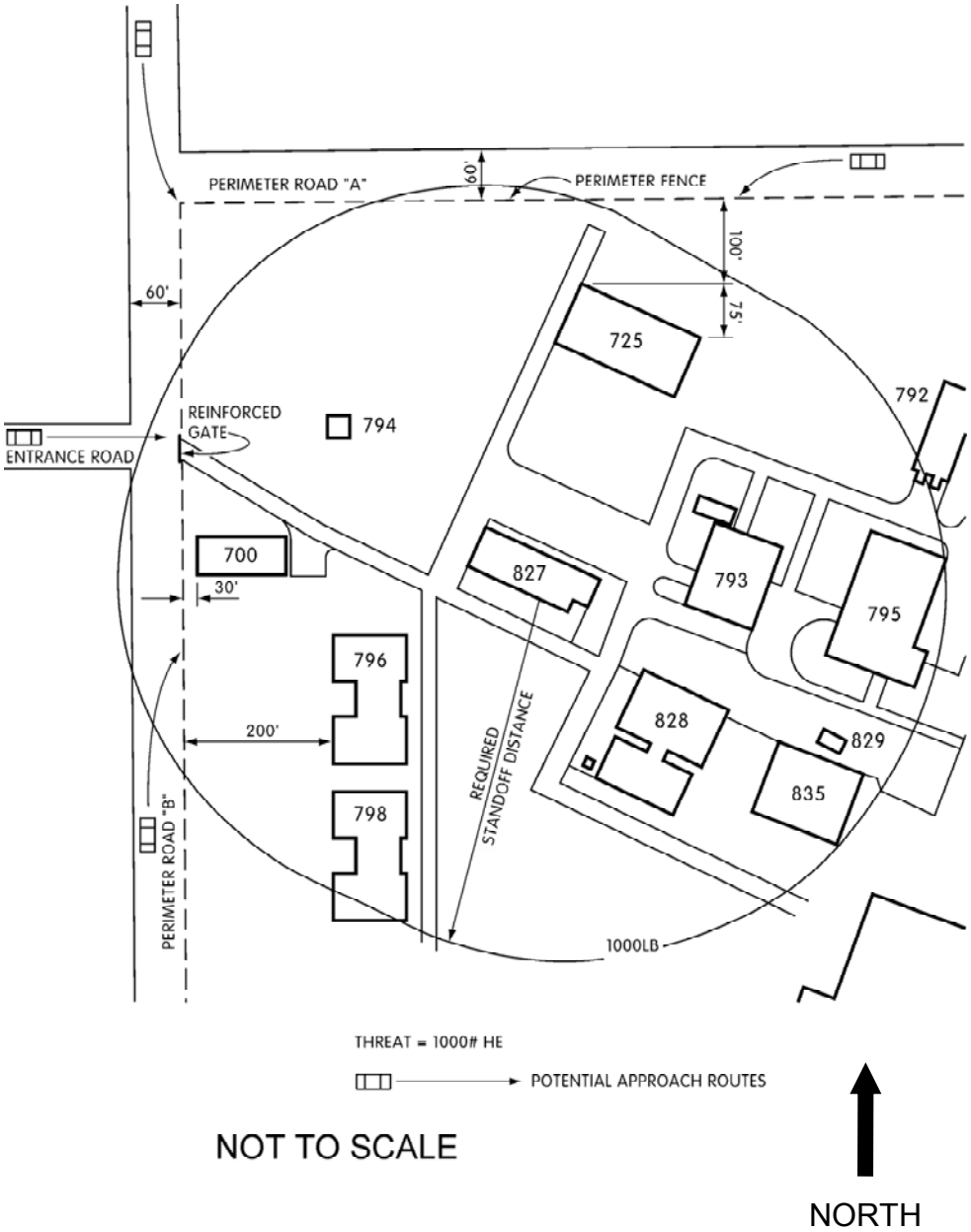

4-3 INTEGRATED PHYSICAL SECURITY SYSTEM.

Any vulnerabilities identified in the site survey should be addressed by developing an integrated physical security protection system. Design Basis Threats identified for the specific facility and current security requirements need to be considered. These threats are determined by assessment of site-specific threats or are specified by an installation. Comprehensive protection can be provided by coordinating physical barriers (such as fences, active barriers, and passive barriers) with other security components and options. For example, perimeter sensors, lights, and closed circuit television can be used to detect vehicles attempting to covertly penetrate the perimeter. Sallyports can be used to detect bombs hidden in vehicles entering a facility. Performance of the perimeter barrier can be enhanced with strategic placement of bollards, ditches, and planters. A wide range of potential threats can be detected early using clear zones as well. All barrier requirements should be coordinated with the ECF design guidance given in UFC 4-022-01 *Security Engineering: Entry Control Facilities/Access Control Points.* Figure illustrates some examples of integrated physical security measures.

Figure 4-2 Integrated Physical Security System

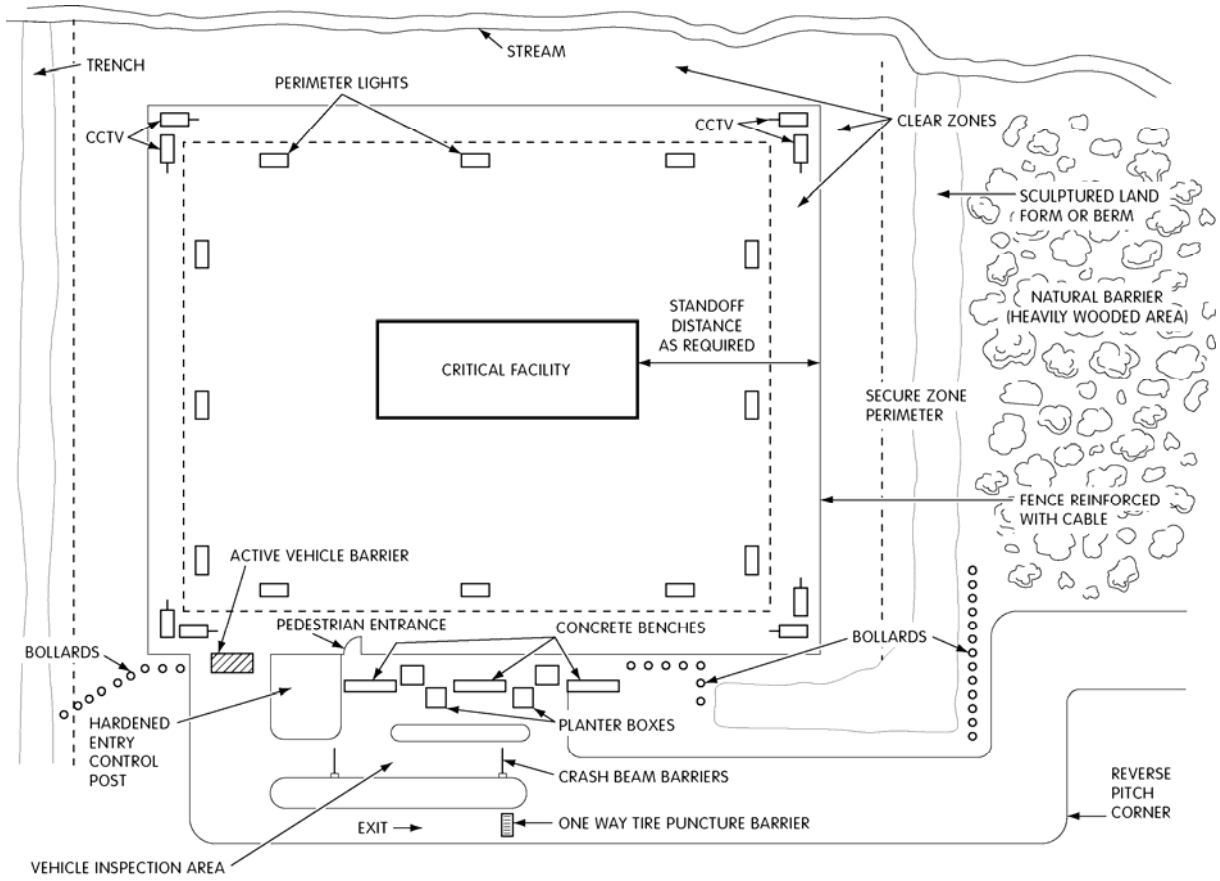

4-4 ATTAINABLE VEHICLE SPEED.

The speed of a vehicle at the point of impact on a vehicle barrier is a major parameter in determining the required performance of the barrier. The impact is calculated from the

initial speed, "**v**", the acceleration rate, "**a**", and the distance, "**s**", available for acceleration between the starting point and the point of impact. Additional factors that must be considered are the general terrain, the surface condition of the path, whether or not the path is straight, curved, or banked. Information presented in Figure through Figure allows calculation of maximum attainable vehicle speed, or suggests strategies for modifying possible attack paths to control vehicle speed.

The impact speed along the perimeter should be calculated for all possible driving paths identified on the site survey map. The strategy for barrier system design, selection, and installation can then be developed using this data.

NOTE: The typical acceleration of conventional vehicles is usually known. For example, 11.3 ft/sec^2 (3.45 m/sec^2) is typical for high performance cars, and 5.8 ft/sec^2 (1.77 m/sec^2) is typical for 2-1/2-ton (2,273-kg) commercial trucks.

The methods presented in this section for determining attainable vehicle speeds assume flat roadway surfaces. Most roadways are not flat, either due to super-elevation or to typical roadway crowning and constructed transverse slopes. If a driver can use a non-flat roadway surface to his advantage in attaining a higher speed, this needs to be taken into consideration. The use of any geometrics in the selection of barriers and design of an ECF should only be provided under the guidance of an engineer experienced in roadway/transportation engineering. Otherwise, some of the assumptions for the methods in this section may be highly conservative and may lead to designs that are treacherous for vehicles traveling at normal/design speeds, for vehicles traveling during wet conditions, or for large commercial and emergency vehicles.

Consult with the AASHTO Roadside Design Guide and AASHTO Geometric Design of Highways and Streets for roadway design and road geometry/geometric requirements.

4-4.1 **Attainable Vehicle Speed on a Straight Path**.

The highest attainable vehicle speed results from a long, straight path between the starting point and a vehicle barrier.

a) On a Horizontal Surface. On a horizontal, straight path, the speed attainable by an accelerating vehicle depends primarily on its initial speed, "$\mathbf{v_0}$", the acceleration, "**a**", and the distance, "**s**", traveled during acceleration. The relationship among these parameters is given in Equation (1).

$$\mathbf{v = (v_0^2 + 2as)^{1/2}} \qquad (1)$$

where:

v = final vehicle speed (mph or kph)
$\mathbf{v_0}$ = initial vehicle speed (mph or kph)
a = acceleration (ft/sec^2 or m/sec^2)
s = distance traveled (feet or meters)

For convenience, Equation (1) is plotted as Figure , using a conversion factor for values in ft/sec^2 and mph.

Figure 4-3 Vehicle Speed vs. Acceleration Distance

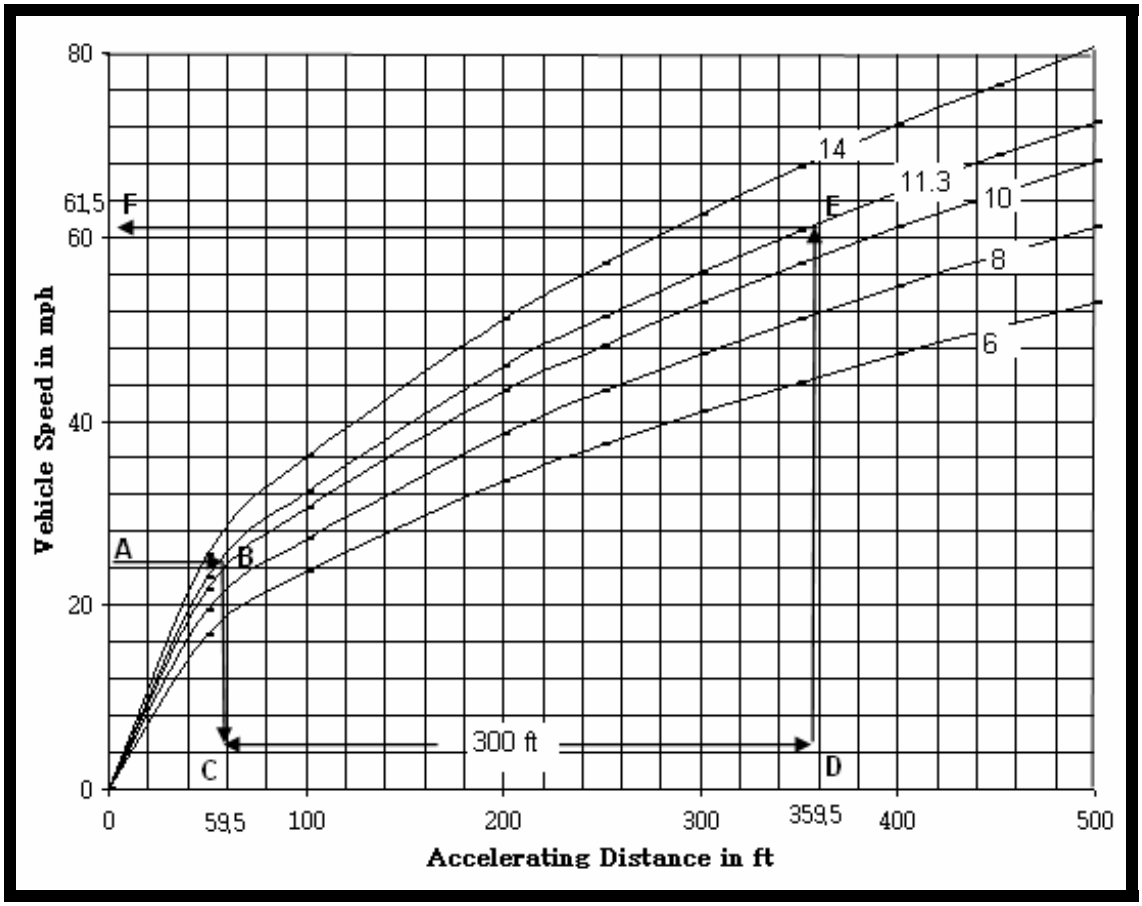

To illustrate its use, consider the case of a high performance car accelerating on a 300-ft (91.5 m), straight, horizontal path with initial speed, $\mathbf{v_0}$ = 25 mph (15.53 kph), and acceleration, **a** = 11.3 ft/sec^2 (3.4 m/sec^2). The speed at the end of the path will be determined as follows:

1) Locate $\mathbf{v_0}$ = 25 mph (15.53 kph) on the vertical axis (point A).

2) Draw a horizontal line from point A until it intersects the curve (at point B) for **a** = 11.3 feet per second^2 (3.4 m/sec^2).

3) Draw a vertical line down from point B until it intersects the horizontal axis (point C). This is the point from which velocity will be calculated.

4) Locate point D on the horizontal axis so that the distance between points C and D is the accelerating distance [300 feet (91.5 m) in this example].

5) Draw a vertical line up from point D until it intersects the curve (at point E) for **a** = 11.3 ft/sec^2 (3.4 m/sec^2).

6) Draw a horizontal line from point E until it intersects the vertical axis (point F).

7) The value of the speed, "**v**", at point F, 61.5 mph (98.97 kph), is the answer.

Note: If "$\mathbf{v_0}$" = 0, the graph can be used to determine velocity from a dead start. For consideration of a 2 ½ ton truck, the acceleration is 5.8 ft/sec^2 (1.77 m/sec^2).

b) On a Slope. Due to gravitational effect, to achieve the same final speed as that on a horizontal path, the required distance for acceleration on a slope will be shorter (longer) if the vehicle is traveling downhill (uphill). Let, "**s**", be the acceleration distance needed to also attain final speed, "**v**", on a horizontal path, and let, "**s'**", be the acceleration distance needed to attain, "**v**", on a sloped path. The following relationship shown in Equation (2) applies:

$$\mathbf{s'/s = 1/[1 + (g/a)\sin\theta]} \qquad (2)$$

where:

s' = acceleration distance needed to attain final speed on a sloped path
s = acceleration distance needed to attain final speed on a horizontal path
g = gravitational constant = 32.2 ft/sec2 (9.82 m/sec2)
a = acceleration of the vehicle, ft/sec2
θ = angle between the slope and the horizontal in degrees

This correction factor relationship is plotted as Figure .

Figure 4-4 Speed Correction Factor for Vehicles Driving on a Sloped Path

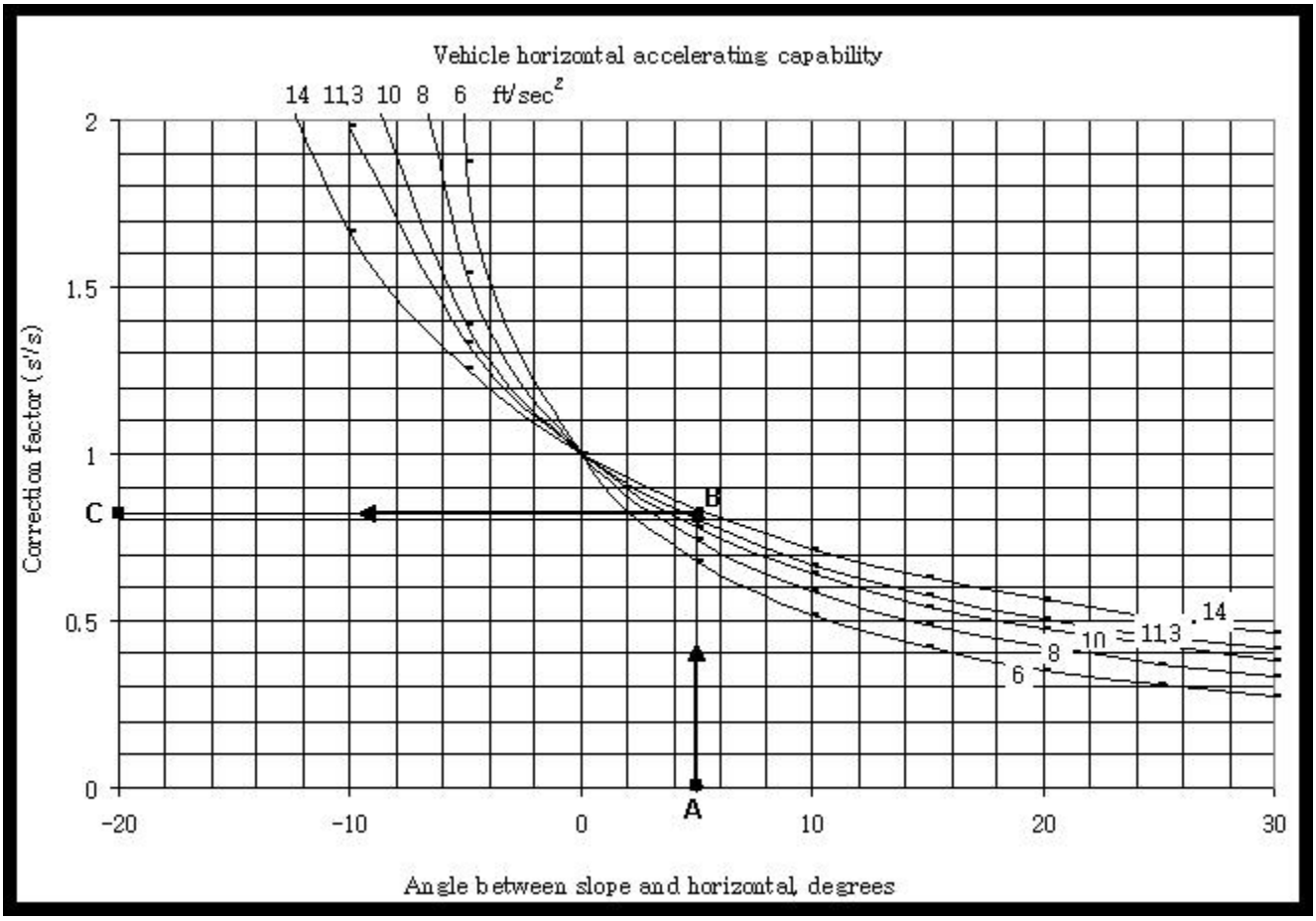

To illustrate the use of this figure, consider the example used in 0a, except the vehicle is traveling downhill on a 5-degree slope. The steps are:

1) Locate 5 degrees on the horizontal axis (point A).

2) Draw a vertical line up from point A until it intersects the curve (at point B) for **a** = 11.3 ft/sec^2 (3.4 m/sec^2).

3) Draw a horizontal line from point B toward the vertical axis and read off the "**s'/s**" value at the intersecting point C.

4) The value of **s'/s** is 0.8. Because **s' = s x (s'/s)** and **s** = 300 feet (91.5 m), therefore **s'** = 300 feet (91.5 m) x 0.8 = 240 feet (73.2 m).

This example shows that to accelerate the vehicle to the same 61.5 mph speed (98.97 kph), a 5-degree slope will help shorten the accelerating distance from 300 feet (91.5 m) to 240 feet (73.2 m). It clearly demonstrates the increased vulnerability caused by local terrain sloping down toward a protected area. Modifying the local terrain is an effective way to minimize vulnerability.

4-4.2 **Attainable Vehicle Speed on a Curved Path**.

Centrifugal force makes it difficult to drive fast on a curve unless the road surface is properly banked. The centrifugal force, "**CF**", of a vehicle moving on a curved path depends on its weight, "**w**", the radius of the curvature, "**r**", and the speed, "**v**", and **g** = gravitational constant = 32.2 ft/sec^2 (9.82 m/sec^2), as shown in Equation (3).

$$\mathbf{CF = wv^2 /(gr)} \qquad (3)$$

where:

CF = centrifugal force (lbs/kgs)
W = vehicle weight (lbs/kgs)
r = radius of curvature (feet/meters)
v = vehicle speed (mph/kph)
g = gravitational constant = 32.2 ft/sec2 (9.82 m/sec2)

When the "**CF**" is large enough, it will overcome the road friction and a vehicle will skid. The vehicle could also topple if its center of gravity is too high. Because skidding usually occurs first, only this condition will be considered here. Road friction force, "**FF**," equals the product of the vehicle weight, "**w**," and the friction coefficient, "**f**," between the tires and the road surface, as shown in Equation (4).

$$\mathbf{FF = fw} \qquad (4)$$

where:

FF = road friction force
f = friction coefficient
w = vehicle weight

NOTE: The value of friction coefficient, "f", is between 0 and 1 and is highly variable. It depends on the tire and its condition, the material and condition of the drive path, any oil or water on the drive surface, etc. On a roadway, under normal conditions, f = 0.6 is usually used. If unable to determine, use f = 1, which will provide a more conservative value.

a) On a Horizontal Surface. The skidding speed (the speed at which skidding occurs), "$\mathbf{v_S}$", is obtained by equating the centrifugal force and the road friction force, as shown in Equations (5) and (6).

$$\mathbf{fw = w\, v_S^2 /(gr)} \qquad (5)$$

where:

f = friction coefficient
w = vehicle weight
$\mathbf{v_S}$ = skidding speed
g = gravitational constant

r = radius of curvature

From which,

$$\mathbf{v_S} = \sqrt{fgr} \tag{6}$$

where:

v_S = skidding speed
f = friction coefficient
g = gravitational constant = 32.2 ft/sec^2 (9.82 m/sec^2)
r = radius of curvature

Because "**v**" must be made as small as possible for the most cost-effective protection, this relationship suggests that options for the physical security planner include making the drive path slippery, with a small radius of curvature, or both. The above relationship is plotted as Figure , using "**f**" as a parameter using a conversion factor for values in ft and mph.

Figure 4-5 Skid Speed vs. Radius of Curvature

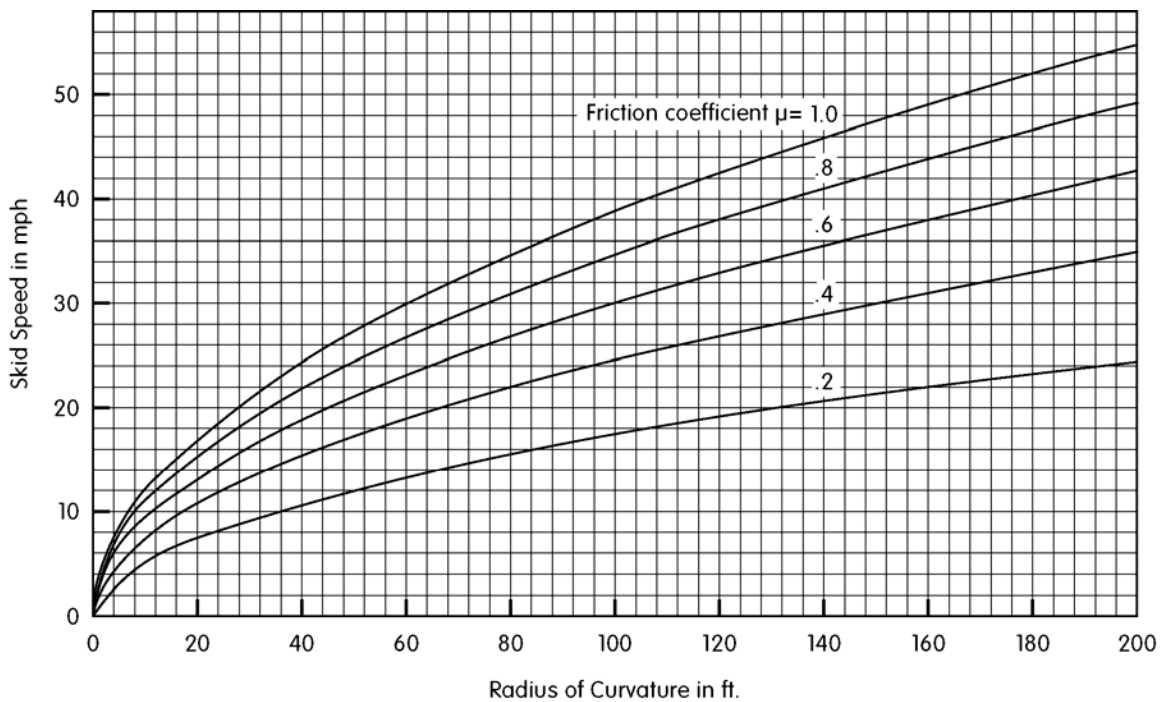

Using this figure, with a chosen value of "**f**" (see previous Note) and the tolerable vehicle impact speed of the selected barrier, a curved path can be designed to cause any vehicle driving above that velocity to skid.

b) On a Slope. Unlike a straight downhill path (see Paragraph 0b), a curved downhill path is actually effective in deterring vehicle attacks. This is because the extra velocity gained from traveling downhill can easily cause the vehicle to skid or topple. Therefore,

if a protected area has downhill approach paths, the local terrain can be modified so that a straight driving path is impossible. Caution should be exercised when designing roads to decrease velocity. Posting speed restrictions along the path is strongly recommended to reduce the possibility of accidental skidding.

To determine the final velocity at the end of a curved path, use the length of the curved path as the acceleration distance in Figure and as the acceleration distance needed to attain final speed on a horizontal path (**s**) in Figure . Figure can then be used to determine the velocity at which the vehicle will skid.

4-4.3 **Attack Routes Parallel to the Barrier**.

A reduction in energy transferred to a barrier can be accomplished by forcing a vehicle to make an abrupt (short radius) turn before impacting the barrier. Short radius turns effectively reduce vehicle speed by forcing the vehicle to slow down to avoid skidding, reducing the load transfer if the impact angle is less than 90 degrees to the barrier. Thus, the amount of energy that must be absorbed by a perimeter barrier depends on the impact angle (see **Error! Reference source not found.**, perimeter roads A and B for a graphical representation of this angle of impact) and the final speed of the vehicle at impact. The load transferred to the barrier is determined by the perpendicular component of the velocity. By using Figure and Figure , the impact angle directed toward the barrier, based on the offset distance (distance between restricting barriers, i.e., the distance between curbs or barriers that will limit the available turning radius), can be determined. These figures are based on the formulas provided in Paragraph 0a. Figure and Figure show the impact angle versus speed for a given offset distance for friction factors **f** = 0.5 and **f** = 0.9. The curves can be used to determine the angle of impact, "**θ**", knowing the values of the friction coefficient, "**f**", speed at the start of the turn, "**v**", and the offset distance available.

Once the angle of impact is determined from Figure and Figure , the speed component perpendicular to the barrier, "**Vp**", can be calculated using Equation (7), where "**sinθ**" is the correction factor.

$$\mathbf{Vp = v \sin\theta} \qquad (7)$$

where:

Vp = speed component perpendicular to barrier
V = speed at start of turn
θ = angle of impact

Figure 4-6 Correction Factor for Vehicle Traveling Parallel to Barrier (Based on Coefficient of Friction, f = 0.5)

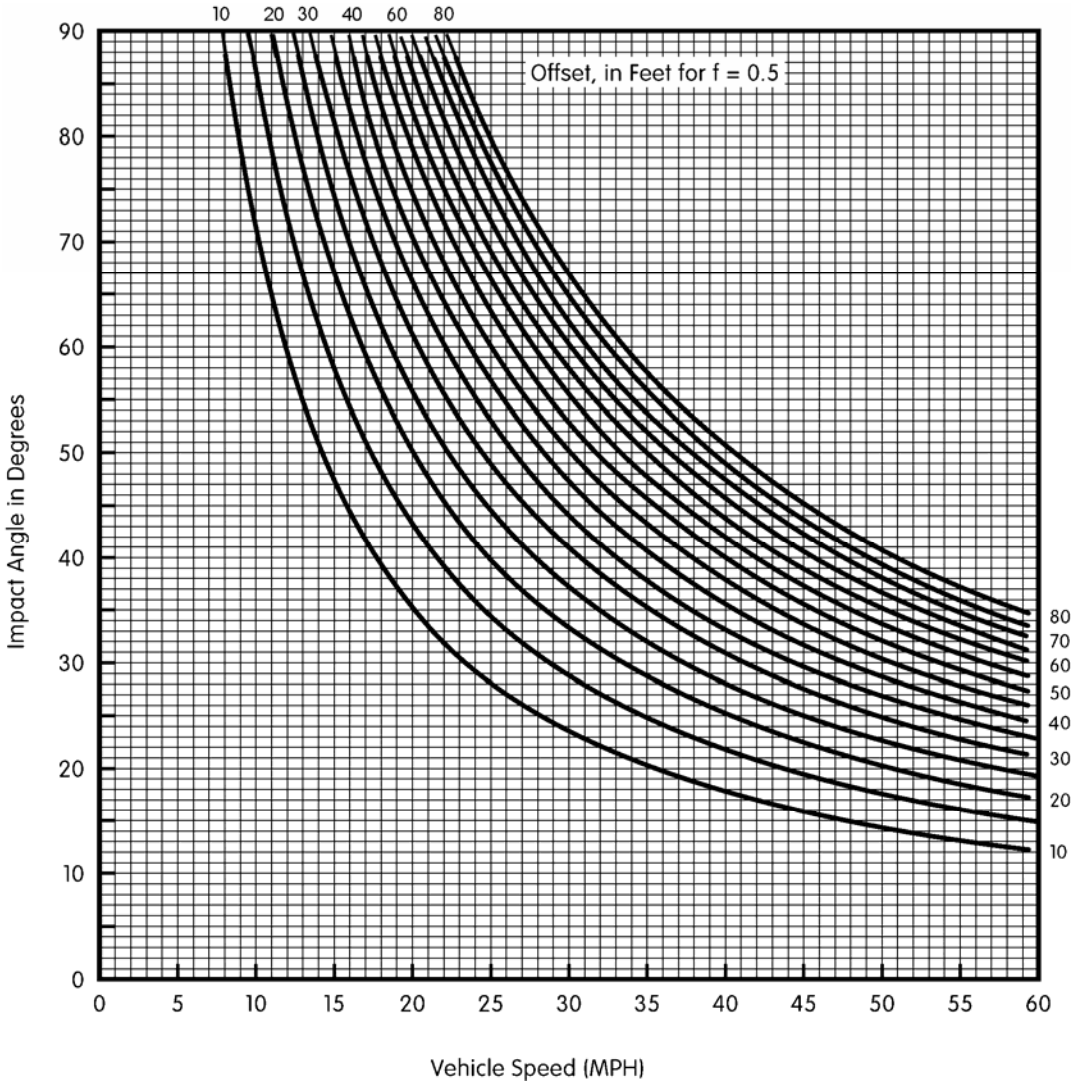

Figure 4-7 Correction Factor for Vehicle Traveling Parallel to Barrier (Based on Coefficient of Friction, f = 0.9)

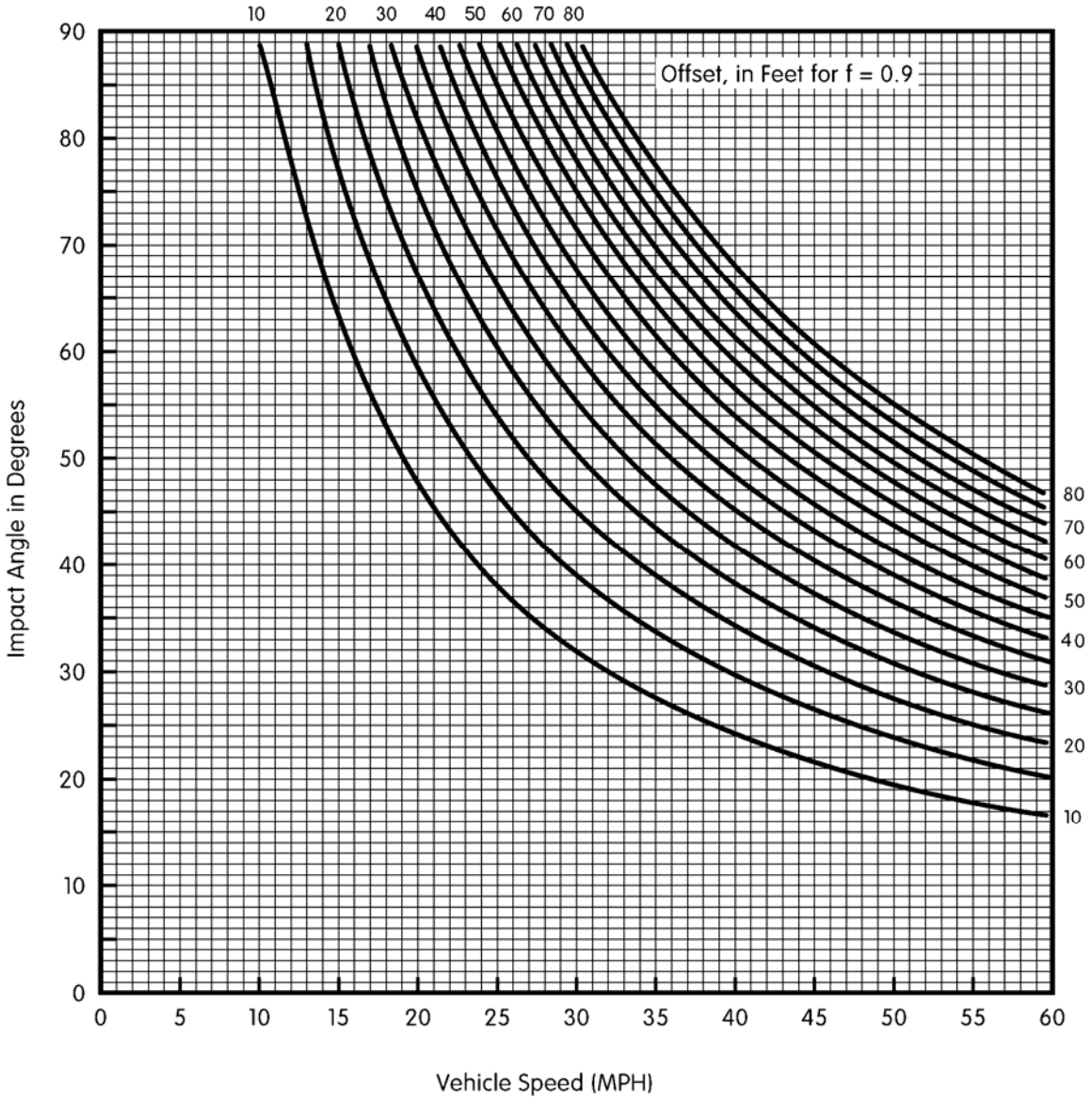

For convenience, Table provides a correction factor for "**Vp**" based on the speed of the vehicle at the beginning of the turn, the offset distance available for negotiating the turn, and a friction coefficient **f** = 1.0 (the most conservative value). Thus, "**Vp**" is calculated by multiplying the initial speed of the vehicle by the correction factor from Table .

Table 4-1 Speed Correction Factor for a Vehicle Traveling Parallel to Barrier (Based on Friction Coefficient = 1.0)

Speed of Vehicle in mph (kph)→	20 (32)	30 (48)	40 (64)	50 (80)	60 (97)	70 (113)	80 (129)
Max. Radius of Curve @ f=1.0 ft (m)→	27 (8)	60 (18)	107 (33)	167 (51)	240 (73)	327 (100)	427 (56)
Offset Distance in ft (m) ↓							
10 (3.1)	0.616	0.559	0.438	0.342	0.292	0.242	0.208
20 (6.2)	0.966	0.743	0.588	0.470	0.407	0.342	0.309
30 (9.3)	1.0	0.866	0.707	0.547	0.485	0.423	0.375
40 (12.4)	1.0	0.946	0.788	0.656	0.559	0.470	0.423
50 (15.3)	1.0	0.988	0.848	0.707	0.616	0.545	0.470
60 (18.3)	1.0	1.0	0.899	0.766	0.656	0.588	0.515
70 (21.4)	1.0	1.0	0.940	0.809	0.707	0.629	0.545
80 (24.4)	1.0	1.0	0.966	0.867	0.743	0.656	0.574

4-5 VEHICLE KINETIC ENERGY.

The kinetic energy of a moving vehicle is measured by its weight and speed, calculated as shown in Equation (8).

$$KE\ (\text{ft-lbf}) = 0.0334\ wv^2 \qquad (8)$$
$$KE\ (\text{kgf-m}) = 0.0039\ wv^2$$

where:

KE = kinetic energy in ft-lbs force (kgf-m)
W = vehicle total weight in lbs (kg)
V = vehicle speed in mph (kph)

A vehicle must have a certain amount of kinetic energy to penetrate perimeter security barriers. The vehicle must penetrate these barriers to inflict damage on a protected facility. Since kinetic energy is a function of vehicle weight and speed, a heavy vehicle moving slowly and a lighter vehicle moving fast could have the same kinetic energy.

Kinetic energy for 4,000-lb and 15,000-lb vehicles, traveling at various speeds, is shown in Table . Once the kinetic energy of the vehicle has been determined, active and passive barriers that are capable of stopping the vehicle can be selected from the information contained in Chapters 5 and 6.

In some cases (with dead men, bollards, cabled concrete tee walls or chained vehicles etc.) some of these being unique expeditionary uses based on available material there

may be a requirement for the design of system of barriers other than those listed herein. Those cases may require the computation of an impact force to design that system. An impact force is a high force or shock applied over a short time period. Since force is the product of mass times acceleration for a mass *m* accelerating at an *acceleration*, then assuming an ideal system, we can set the impact force as, mass times the difference in velocity for a time interval *dt*. (F= mXdv/dt)

For example, a car that weighs 1 kg moving at 500 m/s and that hits a 'perfect' steel barrier where it uniformly decelerates from 500 m/s to 0 m/s in .02 seconds, has an approximate impact force of 25000 N. Thus, a body, which decelerates more quickly, has a greater effective impact force than one that decelerates more slowly.

Table 4-2 Kinetic Energy Developed by Vehicle, ft-lbf (kgf-m) x 1,000

	Speed of Vehicle in mph (kph)						
Vehicle Weight in lbs (kg) ↓	10 (16)	20 (32)	30 (48)	40 (64)	50 (80)	60 (97)	70 (113)
4,000-lb (1,818 kg) Vehicle	13 (2)	53 (7)	120 (17)	214 (29)	334 (46)	481 (66)	655 (90)
15,000-lb (6,818 kg) Vehicle	50 (7)	200 (28)	451 (62)	802 (111)	1,253 (173)	1,804 (249)	2,455 (339)

CHAPTER 5 VEHICLE BARRIER SELECTION, DESIGN, AND INSTALLATION

5-1 VEHICLE BARRIER TYPES.

Vehicle barriers are categorized as either active or passive. Active and passive barriers can be fixed or movable, depending on how they are made, operated, or used. Some commercial barriers are dual-classified, when they meet the requirements for both categories (e.g., fixed-active, portable-passive, etc.) There is no industry-wide standard terminology for vehicle barriers. For this UFC, the following definitions will be used.

5-1.1 Active Barrier Systems.

An active barrier requires some action, either by personnel, equipment, or both, to permit or deny entry of a vehicle. The system has some form of moving parts. Active barrier systems include barricades, bollards, beams, gates, and active tire shredders.

5-1.2 Passive Barrier Systems.

A passive barrier has no moving parts. Passive barrier effectiveness relies on its ability to absorb energy and transmit the energy to its foundation. Highway medians (Jersey), bollards or posts, tires, guardrails, ditches, and reinforced fences are examples of passive barriers.

5-1.3 Fixed Barrier Systems.

A fixed barrier is permanently installed or requires heavy equipment to move or dismantle. Examples include hydraulically-operated rotation or retracting systems, pits, and concrete or steel barriers. Fixed barrier systems can be either active or passive.

5-1.4 Portable/Movable Barrier Systems.

A portable/movable barrier system can be relocated from place to place. It may require heavy equipment to assist in the transfer. Hydraulically operated, sled-type, barricade systems, highway medians, or filled 55-gallon drums that are not set in foundations are typical examples. Portable/movable barrier systems can be either active or passive.

5-2 DESIGN CONSIDERATIONS.

In addition to the calculation of the kinetic energy of a threat vehicle described in 0, many factors must be considered before selecting an appropriate barrier system. The Security Engineering: Entry Control Facilities/Access Control Points UFC 4-022-01 is a required document for planning vehicle barrier design and installation. An outline is presented below to serve as a checklist of key

information that is important to the facility planner, security professional, designer, user, and maintainer in the design of barrier systems. Some of these issues are discussed in more detail following the outline.

- Design Basis Threat (s)
    - The Attack Vehicle(s)
        - Type
        - Weight
        - Maximum Velocity
        - Contents
        - Calculated Kinetic Energy
    - Points of Attack
    - Path of Attack(s)
    - Direction of Attack(s)
    - Type of Attack
        - Single
        - Multiple Vehicles
    - Country in Which Installation Resides

- Allowable Penetration Beyond the line of Barrier(s)

- Sufficient Standoff Distance Between Planned Barrier and Protected Structure

- Existing or Desired Traffic Patterns
    - Levels of Authorized Traffic
        - Peak Levels
        - Average Levels per Day
    - Types of Traffic
        - Staff
        - Freight
        - Visitors
    - Number of Available Traffic Lanes
        - One-Way Only
        - Reversible
        - Width and Separation
    - Minimization of Access Points

- Vehicle Barrier Operating Protocol(s).
    - Deploy and Inspect
        - Maximum Throughput Rate
            - Per Day
            - Per Hour (peak)
    - Threat Dependent, Local / Remote Option
    - Sally Port Interlock with other Visual Barriers
    - Automatic (Emergency Deployment)
        - Deployment Signal Source

Manual
Velocity Sensors
Direction Sensors
Other
Minimum Speed of Deployment
Automatic (Normal Authorized Traffic) Vehicle Identification Means
Parade
Lock down
Free Flow

- Site (Civil Engineering)
  - Roadway Layout
    - Number of Lanes
    - Width
    - Flat / Sloping/ Crowned
    - Islands, Etc.
    - Lane Separator(s)
    - Boundary / Passive Barriers
  - Approaching or Crossroad Locations
  - Sub Surface Conditions
  - Berms
  - Landscaping
  - Buried Utilities
  - Drainage
  - Frost Line
  - Water Table Height

- Site (Facility Engineering)
  - Power Distribution Points
  - Communication Lines
    - Secure
    - Local
    - Existing Network Type
    - Required Network Type (Bus, Ring, Multiple Rings, Mesh, or Combination)
  - Drainage
  - Utility Cabinets/ Equipment Lockers
  - Lighting
  - Traffic Signals/ Controls
  - Buried Vehicle Sensors

- Site (General)
  - Environmental
    - High/ Low Temperatures
    - Rain Fall
    - Snow

Frost Line
Other
Power Sources
Location
Type
Local
Post-Emergency Backup
Voltage/ Phase/ Frequency

- Barrier Selection
  DOS / DoD Crash Rating

Note:

Both the U. S. Department of State and the U. S. Department of Defense rate barriers based on full scale crash tests conducted by independent test laboratories or government-approved facilities. See United States Army Corps of Engineers (USACE) Protedtive Design Center website for latest DoS and DoD certified barriers - https://pdc.usace.army.mil/library/BarrierCertification/

The 'K' in a rating refers to the Kinetic Energy (K.E.) of the test vehicle at the moment of impact.

A rating of K12, for example, indicates K.E. of approximately 1,200,000 ft-lb (165,960 kg-m) of energy (15,000 lb @ 50 mph [6,818 kg @ 80 kph]). A rating of K8, 800,000 ft-lb (110,640 kg-m) of energy (15,000 lb @ 40 mph [6,818 kg @ 64 kph]), and K4, 400,000 ft-lb (55,320 kg-m) of energy, (15,000 lb @ 30 mph [6,818 kg @ 48 kph]).

The 'L' rating refers to the penetration of the vehicle beyond the front line of the barrier. A rating of 'L3' indicates the truck penetrated less than 3.0 feet (0.9 m). A rating of 'L2' means penetration of less than 20.0 feet (6 m). And 'L1' means the penetration was less than 50.0 feet (15 m).

Active or Passive
Temporary or Permanent
Style of Barrier(s)
Wedge, Plate type (Phalanx) (In ground / surface / shallow mount)
Bollard
Rolling Gate
Drop Arm
Transportable
Required Aesthetics, if any
Flush Mount Barriers to Road Surface

Width of Lane(s) to be Protected
Number of Lanes
Barriers to be Operated
    Independently
    Sets
    Sally Port(s)
Speed of Operation
    Normal
    Emergency
Number of Operating Cycles per Barrier
    Per Day
    Per Hour (peak)
Available Training from Manufacturer
Availability of Spare Parts
Crash Test Results
Computer Analysis Results Using BIRM 3D (PDC TR90-2)
Environmental Protection
    Winterizing
    Cooler (Hydraulic Power Unit)
    Galvanizing
    Stainless Steel
Barrier Road Surface
    Special Texture
    Excessive Load (over 50,000 lbs)
Cost Effectiveness

- Foundation/ Installation
    Foundation Restrictions
        Allowable Depth of Foundation
        Extent of Foundation Allowable
        Flush mount barrier system to road surface
    Power Source
        Distance from Barrier Line
        Voltage/ Phase / Frequency
        Power Available (watts)
        Type of Source
    Location of Enclosure for Hydraulic Power Unit
        Existing Building
        Vault
        Stand Alone
        Distance from Barrier Line
    Drainage
    Color
    Special Markings
    Mounted Lights
    Equipment Required to Move Barriers

OPERATING SYSTEMS CONSIDERATIONS

- Control Circuits
  - Single Barrier
  - Multiple Barrier(s)
    - Local Control(s)
    - Local(s) with Remote Master(s)
    - Remote Empower and Override
    - Hand Held
  - Sally Port Interlock
  - Master to Slave Interconnect
    - Hard line
    - RF Link
    - Phone Line, Etc.
  - Remote / Local Status Signal(s)
    - Status Panel (Visual Indicators / Audible)
      - Barrier Position (Guard/ Open)
      - Cycling
      - Advance Warning
    - Open Beyond Time-out
    - Security Level
      - Constant Surveillance?

- Power off Operation
  - Hydraulic Reserve/Number of Cycles
  - Control Circuit/Battery Backup
  - Emergency Standby Power
    - Dedicated
    - On Site
  - Hydraulic Hand Pump

- Power Failure Deployment
  - To Full Guard Position
  - To Full Open Position

- Warning / Safety Signs/ Signals
  - Barrier Closing/ Opening
    - Lights
    - Horns
    - Strobes, Etc.
  - Barrier in Guard Position
    - Lights
    - Horns

Red Traffic Signal (Steady/ Flashing)
Barrier Down and Clear (Yellow Traffic Signal)
Semaphore Gate Arms
Gate Arm Synchronized with Barriers Interlocked
Gate Down Before Barrier Deployment
Barrier Down Before Gate Opening

- Emergency Fast Operation (EFO)
  - Signal Source
    - Automatic Sensors
    - Master(s) / Slave Panels(s)
    - Deploy Barriers/Speed
  - Lock Out
    - Slave Panels
    - Sub Masters
    - Automatic Entrance Controls
  - Deactivate (EFO)
    - Signal Source
      - Local Panel Authority
        - Local Guard
        - Supervisor
          - Key Switch
          - PIN
      - Master Panel Authority / Level

Some of these design and operating considerations, as well as other key issues, are discussed in more detail in the following sections.

5-2.1 **Fencing**.

Fences should not be considered as protection against a moving vehicle attack. Most fences can be easily penetrated by a moving vehicle and will resist impact only if reinforcement is added. Fences are primarily used to:

a. Provide a legal boundary by defining the outermost limit of a facility

b. Assist in controlling and screening authorized vehicle entries into a secured area by deterring overt entry elsewhere along the boundary

c. Support detection, assessment, and other security functions by providing a "clear zone" for installing lighting, intrusion detection equipment and CCTV

d. Deter "casual" intruders from penetrating into a secured area by presenting a barrier that requires an overt action to penetrate

e. Cause an intruder to make an overt action that will demonstrate intent

f. Briefly delay penetration into a secured area or facility, thereby increasing the possibility of detection

In the field of security, perimeter barriers provide the first line of defense for a facility. The true value of a perimeter security fence comes in its association with other components of a security system. When perimeter security is required, the security fence forms the basic building block for the rest of the system. UFC 4-022-03 *Security Engineering: Fences, Gates and Guard Facilities* should be consulted for details on the use of fencing in barrier systems.

5-2.2 **Location**.

Active vehicle barriers can be located at facility entrances, enclave entry points (gates), or selected interior locations (e.g., entrances to restricted areas). Exact locations may vary among installations; however, in each case, the barrier should be located as far from the critical structure as practical to minimize damage due to possible explosion. Also, locate support equipment (e.g., hydraulic power, generator, batteries, etc.) on the secure side and away from guard posts to lower the threat of sabotage and injury to security personnel. Passive barriers can be used at entry points, if traffic flow is restricted or sporadic (i.e., gates that are rarely used). Passive barriers are normally used for perimeter protection. For more information regarding the location of vehicle barriers, consult UFC 4-022-01 *Security Engineering: Entry Control Facilities/Access Control Points.*

5-2.3 **Aesthetics**.

The overall appearance of a vehicle barrier plays an important role in its selection and acceptance. Many barriers are now made to blend in with the environment and be aesthetically pleasing, minimizing a “fortress look”.

5-2.4 **Safety**.

An active vehicle barrier system is capable of inflicting serious injury. Even when used for its intended purpose, it can kill or seriously injure individuals when activated inadvertently, either by operator error or equipment malfunction. Warning signs, lights, bells, and bright colors should be used to mark the presence of a barrier and make it visible to oncoming traffic. These safety features must always be provided to ensure personnel safety. The following issues should be addressed to manufacturers and users to identify potential safety issues affecting the selection of an active barrier system:

a. Backup power;

b. Emergency cutoff switch;

c. Adequate lighting;

d. Installation of safety options, such as alarms, strobes (or rotating beacons), and safety interlock detectors to prevent the barrier from being accidentally raised in front of or under an authorized vehicle;

e. Army exception – Installation of Traffic Safety Schemes; i.e., Vehicle Presence Detection, Vehicle Platooning, etc., as outlined in the "Standard Definitive Designs; Access Control Points for U.S. Army Installations".

Once installed, vehicle barriers should be well marked and pedestrian traffic channeled away from the barrier system. For high-flow conditions, vehicle barriers are normally open (allowing vehicles to pass) and used only when a threat has been detected. In this case, the barrier must be located far enough from the guard post to allow time to activate and close the barrier before the threat vehicle can reach it. For low-flow conditions, or where threat conditions are high, barriers are normally closed (stopping vehicle flow) and lowered only after authorization has been approved.

5-2.5 **Security**.

Vehicle barriers must be ready to function when needed. A potential for sabotage exists when barriers are left unattended or are located in remote or unsecured areas. For these installation conditions, tamper switches should be installed on all vehicle barrier access doors to controllers, emergency operation controls and hydraulic systems. Tamper switches should be connected directly to a central alarm station so that security of the barrier system can be monitored on a continuous basis. Provide tamper resistant screws at all controls and junction boxes.

5-2.6 **Reliability**.

Many barrier systems have been in production long enough to develop an operations history under a variety of installation conditions. Reliability data from manufacturers show less than a three-percent failure rate when these barriers are properly maintained. Some systems have been placed in environments not known to the manufacturer, while others have developed problems not anticipated by either the manufacturer or user. Most manufacturers will help resolve problems that arise in their systems. Backup generators or manual override provisions are needed to ensure continued operation of active vehicle barriers during power failure or equipment malfunction. Spare parts and supplies should also be on hand to ensure that barriers are quickly returned to full operation. If a high cycle rate is anticipated, or the environmental impact from hydraulic fluid contamination is a concern, the selection of a pneumatic operating system is recommended. Operate barrier system at least once every 24 hours to assure performance for security operations. Perform this operation at low traffic period or before opening to traffic. Maintain log of this operation.

5-2.7 **Maintainability**.

Many manufacturers provide wiring and hydraulic diagrams, maintenance schedules, and maintenance procedures for their systems. They should also have spare parts available to keep barriers in continuous operation. The manufacturer should provide barrier maintenance support in the form of training, operation manuals, and maintenance manuals. Maintenance contracts are available from most manufacturers and are recommended to ensure proper maintenance of the barrier and assurance that the barrier will function as intended. Reliability and maintainability data are available from most manufacturers. Yearly maintenance contracts are usually available from the manufacturer and should be included in the planning process and budgeted. Maintenance contracts should include inspection, adjustment, cleaning, pressure checks on hydraulic systems, and replacement of worn parts.

5-2.8 **Cost**.

Traffic in restricted or sensitive areas should be minimized and the number of access control points limited. Reducing traffic flow and the number of control points will increase security and lower the overall cost of the system. Installation and operational costs are a significant part of the overall cost of a barrier system and must be addressed during the barrier selection process. Complexity and lack of standardized components can result in high costs for maintenance and create long, costly downtime periods. Reliability, availability, and maintainability requirements on the system also affect costs. Annual maintenance needs to be included in the cost of the system.

5-2.9 **Barrier Operations**.

A barrier must be capable of operating continuously and with minimal maintenance and downtime to properly satisfy security requirements. System failure modes must be evaluated to ensure that the barrier will fail in a predetermined position (open or closed) based on security and operational considerations. Selecting a normally open (allowing access) or closed (preventing access) option should be evaluated based on traffic flow conditions at the site (either existing or expected) and the overall site security plan. Emergency operation systems (backup generators or manual override systems) should be in place to operate the barrier in case of breakdowns or power failure. Security personnel should be involved in the decision to deploy and use a vehicle barrier system. If a normally open (allows traffic through) operation is selected, there must be sufficient distance between the guard and the vehicle barrier to allow for guard reaction time to activate the barrier, barrier deployment time, and time required for selected safety regimes. Certain barriers use locking pins (most notably crash beam type barriers) to lock down barrier. There have been incidents when controls were activated to raise arm with locking pins inserted causing damage to beam portion of barrier. Determine if pin is required for full performance of barrier and inquire of manufacturer if a sensor system is available

that detects presence of pin. Ensure training of personnel to verify pin status prior to operation of crash beam barriers.

5-2.10 **Unobstructed Space**.

Barriers installed in inner and outer security unobstructed space must be designed so they will not provide a protective shield or hiding place. Tall, continuous barriers, such as planters, Jersey Barriers, guardrails, and other similar passive vehicle barriers can be a violation of mandated requirements, if installed in a designated unobstructed space. Placement of any barriers near or within this unobstructed space must be coordinated with the activity security officer.

5-2.11 **Environment**.

The environment must be considered during the selection process. Hinges, hydraulics, or surfaces with critical tolerances may require heaters to resist freezing temperatures and ice buildup. They may also require protection from excessive heat, dirt, humidity, salt water, sand, high water table, and debris. If options for protection against environmental conditions are not available, the system may be unsuitable for a specific location. Maintenance should be increased and/or compensating options (i.e., sump pumps, heaters, hydraulic fluid coolers, etc.) selected for vehicle barriers subject to severe environmental conditions to ensure acceptable operation. In cold regions and during winter months, it is recommended to increase operation of the barrier system to cycle hydraulic fluids through lines. See Reliability paragraph above.

5-2.12 **Installation Requirements**.

The vehicle barrier selected must be compatible with the available power source and with other security equipment installed at the selected site, such as perimeter intrusion detection and CCTVs designed to detect and assess covert penetration of the perimeter. Power requirements can vary depending upon the manufacturer and location of the installation.

5-2.13 **Facility Compatibility**.

The chosen barrier system must be compatible with other security components in place at a site. For example, an active barrier system should not be installed adjacent to an unhardened, chain-link fence because the fence then becomes the weakest path. The cost and value of the active barrier as a preventive measure is then lost. Any decisions on facility compatibility should be coordinated with UFC 4-022-01 *Security Engineering: Entry Control Facilities/Access Control Points.*

5-2.14 **Operator Training**.

Most manufacturers recommend operator training for active barrier systems. Operator training prevents serious injury and legal liability, as well as equipment damage caused by improper operations. If a manufacturer does not provide a thorough program for operator training, the user should develop a checklist for normal and emergency operating procedures.

5-2.15 **Options**.

Manufacturers offer a number of optional features that can be added to the baseline systems. Some options enhance system performance, while others improve maintainability or safety. Options increase system cost and may also increase maintenance requirements. Selection of options depends on operational, safety, security, site, and environmental conditions. The manufacturers of certified DoS anti-ram vehicle barriers listed in

Table B-1 in 0 can be contacted to determine available options for specific vehicle barrier systems. These manufacturers can provide guidance on available options and will make recommendations that will enhance barrier operations.

5-2.16 **Operational Cycle**.

The frequency of operation must be considered in the selection process. Where traffic flow is light, a manually operated or removable passive system may work well at considerable savings. However, for high-traffic conditions (especially during peak hours), an automatically controlled system designed for repeated and fast open and close operation (pneumatic or hydraulic) would be more desirable. The use of one or more barriers at an entry point can also improve throughput.

5-2.17 **Methods of Access Control**.

When selecting an active barrier, consider how vehicles will be allowed access. If a vehicle must be searched for explosives, a sally port design should be used, which will trap the vehicle between two active barriers while it is being searched. This will prevent the vehicle from proceeding into the secured area before it has been searched and prevent escape (see Figure).

Access control can be accomplished with a staffed guard station or, remotely, using card or biometric access control devices that automatically activate the barrier (subject to random searches). The barrier can also be operated from a protected location other than the entry control point, using CCTV and remote controls. Access control systems are available as options from vehicle barrier manufacturers (see

Table B-1). Vehicle-sensing loops on the secure side of the vehicle barrier should always be included to prevent activation of the barrier until the vehicle has completely cleared the system. If card access control systems are used,

procedures must be included to prevent tailgating (authorized vehicle must wait until the barrier has closed completely before proceeding).

5-2.18 **Cost Effectiveness**.

Tradeoffs on protective measures may include:

a. Locating the vehicle barrier to provide optimum separation distance

b. Slowing down vehicles approaching the barrier, using obstructions or redesign of the access route

c. Barrier open to permit access vs. closed to prevent access

d. Active vs. passive barriers

e. System-activating options: manual vs. automatic, local vs. remote, electrical vs. hydraulic

f. Safety, reliability, availability, and maintainability characteristics

5-2.19 **Liabilities**.

Possible legal issues resulting from accidents (i.e., deaths, injuries) and legal jurisdiction (i.e., state, local, foreign country) must be deliberated with the installation legal representatives when deciding to install an active vehicle barrier system.

5-3 **ADDITIONAL DESIGN CONSIDERATIONS**.

The following actions are also to be considered when selecting and installing active barrier systems.

a. If the location of a vehicle barrier is in an area of high water table, consider using a surface mounted or shallow profile barrier system. Below ground barriers can be installed if the required installation depth is above the water table. If the excavation cannot be drained, water collection could cause corrosion, and freezing weather may incapacitate the system.

b. When barriers are installed at entrance and exit gates, also consider installing passive barrier systems along the remaining accessible perimeter of the protected area.

c. Protection of individual buildings or zones within the perimeter is generally more cost-effective than extensive protection of a large facility perimeter. For example, passive barriers installed in areas

where vehicles cannot reach, just to complete a perimeter barrier system, are not effective use of security funding

d. Since most types of active barriers can be easily sabotaged, consider installing active barriers only in areas where they can be under continuous observation.

e. Barriers should be used to divert traffic or prevent entry or exit. Installation of barriers immediately adjacent to guard posts is not desirable because the possibility of injury should be minimized. Consider keeping vehicle barriers as far from guard posts as possible.

f. Barriers should be installed on the exit side of an access control point, as well as the entrance.

g. Long, straight paths to a crash-resistant barrier can result in increased vehicle speed and greater kinetic energy upon possible impact. Where this cannot be avoided, installation of a passive-type barrier maze should be considered to slow the vehicle.

5-4 BARRIER CAPABILITY.

In general, vehicle-crash-resistant barriers should be considered at vehicle access points to sensitive areas and enclaves. Active and passive barriers should be tested against specific threats (vehicle weight and speed). New barrier designs can be analyzed using finite element analysis or computer programs specifically developed to analyze performance of vehicle barriers; however, it is recommended that the barriers be physically tested before being utilized. Supplemental gate and fencing reinforcements may also be needed to provide the same level of protection.

The acceptable penetration distance will vary among installations, depending upon the locations of the barriers relative to the assets to be protected. The appropriate penetration distance for a given facility should be determined by the threat and risk assessments and physical security survey results as indicated by the process outlined in UFC 4-020-01 *Security Engineering Facilities Planning Manual* and UFC 4-020-02 *Security Engineering Facilities Design Manual*. For an illustration, refer to Example 1, 0, of this document.

In the example, the barrier system selected as a candidate barrier must be capable of stopping the vehicle and allowing little or no penetration. Sufficient standoff distance is not available to protect Building 827 from the expected explosive-loading conditions. Possible options would include moving the barriers further away from the target, closing the perimeter roads to traffic, hardening building 827 against increased blast-loading conditions or accepting additional risk to the structure.

For static perimeter barriers, it is important to note that weight alone will not prevent penetration. As described in 0, concrete barriers used to protect against vehicle impact should be anchored to a concrete foundation, if the impact angle is expected to exceed 30 degrees.

5-5 VEHICLE BARRIER CERTIFICATION.

When the Department of State (DoS) published the standard SD-STD-02.01, Revision A, March 2003 "Test Method for Vehicle Crash Testing of Perimeter Barriers and Gates", the penetration distance of a vehicle into a barrier was limited to 1 m. The DoS list of certified barriers was developed under 'Revision A' and all barriers allowing penetration in excess of 1 m were removed from the list. Most DoD components have sufficient standoff and can utilize barriers which allow penetration distances in excess of 1m. Due to this and other needs the requirement for a national standard for crash testing of perimeter was established.

ASTM F 2656-07 Standard Test Method for Vehicle Crash Testing of Perimeter Barriers has been published and is being adopted by both DoD and DoS for certification/approval of vehicle barriers. This standard includes more vehicle types and differing penetration depths. The ASTM test vehicles, overall test protocol, instrumentation, measurements, and report requirements are standardized to provide consistent procedures and requirements for barrier manufacturers and accredited testing facilities.

Under ASTM F 2656-07 barrier manufacturers are required to utilize an accredited independent testing laboratory. Laboratory accreditation must be done in accordance with ISO/IEC 17025. Laboratories that are not ISO/IEC 1705 accredited but whose testing protocols are accepted by a federal agency may also conduct tests for a period of one year after performing the first test using ASTM F 2656-07. However, it is unlikely that this acceptance will be extended beyond those facilities which have previously been given permission to conduct tests in accordance with the current DoS anti-ram vehicle barrier testing criteria. Without the federal agency acceptance, the testing facilities will be required to complete accreditation prior to crash testing of vehicle barriers under this ASTM.

The PDC will continue to maintain a list of approved anti-ram vehicle barriers for DoD. Currently DoS is maintaining their list as well. Barriers on either the DoS list or DoD list are approved for use on DoD projects. If a time comes when the DoS list is no longer kept the PDC will take the information from the DoS list and incorporate it into the DoD list to make it a comprehensive list of barriers for DoD application. Note that not all DoD sites have standoff suitable for barriers which allow more than 1m of penetration. The list of DoD approved anti-ram vehicle barriers and the DoS list of certified anti-ram vehicle barriers are available on the PDC web site: https://pdc.usace.army.mil/library/BarrierCertification

Any barrier that is on the current DoS-certified anti-ram vehicle barrier list may

be used by DoD, as well as any barriers listed on the current DoD approved anti-ram vehicle barrier list. The DoD list includes information on permissible barrier widths as well as information on penetration of the vehicle during the impact test. Barrier systems must be installed in the 'as certified' condition. Only those widths contained in the DoS and DoD approved anti-ram barrier lists are considered acceptable for DoD use.

CHAPTER 6 ACTIVE AND PASSIVE BARRIERS

6-1 ACTIVE BARRIER SYSTEMS.

Commercially available active vehicle barrier systems are presented in this section as generic representations. Inclusion of any equipment in this section does not constitute an endorsement, nor is this a complete listing of vehicle barriers that are commercially available. The equipment shown here is for illustration purposes only. Selection of a specific barrier should be based on site conditions and results of the design, selection, and installation checklist provided in Chapter 5. Results of this checklist can be used to establish cost, operational, performance, and environmental requirements. The checklist results can also be used to select the optimum active and passive barriers from those presented in this section. Users are advised to consult with manufacturers on current and more detailed information regarding products and options available. See Appendix A for a list of DOS-certified vehicle barriers and manufacturers. See United States Army Corps of Engineers (USACE), Protective Design Center, Omaha District (https://pdc.usace.army.mil/library/BarrierCertification for latest versions of DoS and DoD certified anti-ram vehicle barriers. Currently barriers are being tested to be in conformance with ASTM F 2656-07. DoS and DoD are beginning to accept vehicle barriers systems tested in conformance with ASTM F 2656-07.

Barrier systems used must be listed in either the Department of State (DoS) certified or Department of Defense (DoD) approved anti-ram vehicle barrier lists. Barrier widths shall be 'as certified/approved' on these lists. Alternatively, if a barrier system's width is between the widths of two listed barrier systems that are identical except for their widths, then that barrier system is also acceptable. Exceptions and acceptable widths will only be taken from the DoD anti-ram vehicle barrier list. The design and structural materials of the vehicle barrier furnished shall be the same as those used in the crash tested barrier. Crash test must have be performed and data compiled by an approved independent testing agency in accordance with either ASTM F 2656 or SD-STD-02.01. Barriers tested and certified on the previous Department of State standard, SD-STD-02.01, April 1985, and listed on the DoD approved anti-ram vehicle barrier list are also acceptable.

6-1.1 Portable Vehicle Barriers.

6-1.1.1 Description.

The portable vehicle barrier shown in Figure 6-1 is a movable, self-contained, portable roadway barrier, referred to as the vehicle surface barrier system (Example 1). It can be controlled as a manned checkpoint. Example standard equipment for this sample portable vehicle barrier is a 50-ft (15.2-m) cord attached to a control box. For unmanned control, options include either an electric card reader or keypad. The self-contained hydraulic system is located in the curb panels and sealed to prevent fluid leaks. The unit can be placed on any roadway or other flat surface (with passive barriers installed to prevent bypass). Once the electricity is connected, the system is operational. This barrier is best used for temporary installations, where high water table is a concern, or where portability is a requirement. Contact the manufacturer for current cost information. Example performance data are shown in Table 6-1 as Example 1.

A second example of a portable barrier system is depicted in Figure 6-2. This portable high security anti-terrorist vehicle crash barrier can be towed into position by a medium-sized truck. The barrier can be deployed in 15 minutes and can be operated either locally or remotely. The wheels are stored on the side, and the vehicle ramps are folded out upon deployment. Its deployment, retrieval, and operation are all hydraulic and push-button controlled. The system can be equipped with a battery-operated power unit or a hydraulic power unit operated on a locally-supplied power or full manual system, or combination. Example performance data are provided in Table 6-1 as Example 2.

Another portable barrier system (Example 3) is shown in Figure 6-3. This barrier is designed to be rapidly deployed in an emergency situation and fully operational in 15 minutes. It can be towed to a site by a truck, then lowered into position using built-in jacks. The barrier can be an instant road block and can be installed in areas where foundation work cannot be safely or quickly poured. Stabilizers on the back side of the unit serve as additional reinforcement. The electro-hydraulic version of this barrier uses standard relay logic to allow control of the barrier with the supplied push-button control station. Example performance data are provided in Table 6-1 as Example 3.

A fourth example of a portable barrier system is illustrated in Figure 6-4. This maximum security vehicle arrest barrier can be relocated and deployed in less than 20 minutes upon arriving at its intended setup destination. The barrier does not require excavation and will not mark or damage the road surface. Although it is normally operated manually, it can be supplied with a hydraulic operating system. Example performance data are provided in Table 6-1 as Example 4.

6-1.1.2 **Testing**.

The vehicle surface barrier (Example 1) was tested by the Naval Facilities Engineering Command (NAVFAC), Naval Facilities Engineering Service Center (NFESC) at a vehicle barrier test bed in China Lake, California. Upon impact, the cab of a 15,200-lb (6,909-kg) truck, moving at 50.5 mph (81 kph), was crushed. The portable vehicle barrier, with the truck on top, slid 9.2 ft (2.8 m).

Both the Example 2 and Example 3 portable barrier systems have been certified by DoS as Level K4/L1 barriers. They will stop and disable a 15,000-lb (6,818-kg) truck, moving at 30 mph (48 kph). The manufacturers can provide crash test data.

The Example 4 portable barrier system has several versions. The version depicted in Figure has been crash-certified by DoS as K12/L2. It will stop a 15,000-lb (6,818-kg) truck, traveling at 50 mph (80 kph). Specific crash test data can be obtained from the manufacturer.

Figure 6-1 Vehicle Surface Barrier (Example 1)

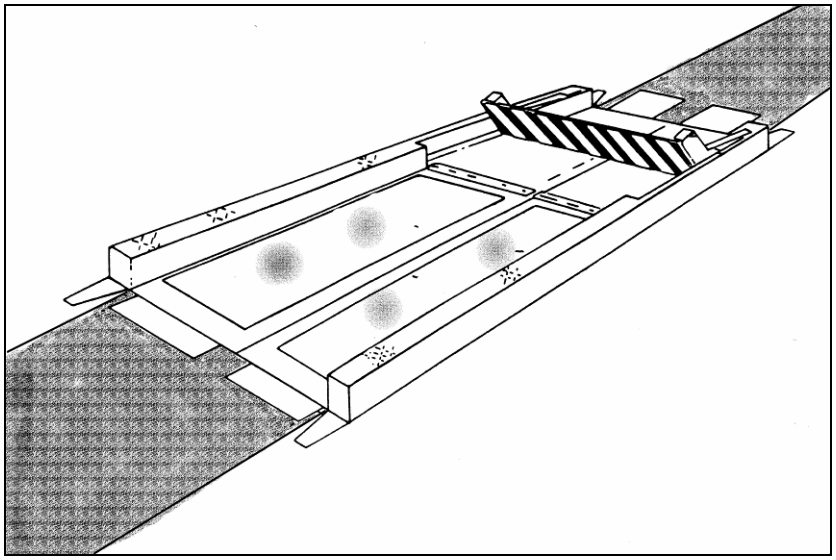

Table 6-1 Performance Data for Portable Vehicle Barriers

	Example 1*	Example 2*	Example 3*	Example 4*
Height, in. (cm)	30 (76)			31 (78.7)
Width, in. (cm)	96 (244)		144 (366)	144 (366)
Normal operating cycle (seconds)	3	10 - 15	15	3 - 5
Emergency operating cycle (seconds)	1			
Kinetic energy absorbed in impact testing, ft-lbf (kgf-m) x one million	1.2 (0.16)			1.2 (0.16)

*DoS certified

Figure 6-2 Portable High Security Anti-Terrorist Vehicle Crash Barrier (Example 2)

Figure 6-3 Portable Barrier (Example 3)

Figure 6-4 Maximum Security Vehicle Arrest Barrier (Example 4)

6-1.2 **High-Security Barricade System**.

6-1.2.1 **Description**.

The high-security barricade systems, shown in Figure 6-5 and 6-6, are self-contained, hydraulically or pneumatically-operated units that, depending on the model, rise to various heights. These barriers are intended for high-speed impact conditions. Models are available for site conditions where shallow foundations are required. Performance data for an example system are shown in Table 6-2.

6-1.2.2 **Testing**.

Numerous manufacturers now produce DoS-certified high-security barriers which have been formally crash-tested. A summary of the DoS-certified barriers is included in Appendix B. The manufacturers can provide crash data for DoS-certified models. An example model was tested by Sandia National Laboratories with a 6,000-lb (2,727-kg) vehicle, traveling at 50 mph (80 kph), that penetrated the barrier 27 ft (8.2 m) and an 18,000-lb (8,182-kg) vehicle, traveling at 30 mph (48 kph), that penetrated 29 ft (8.8 m). Another model was tested by Southwest Research Institute for DoS using a 15,000-lb (6,818-kg) vehicle, traveling at 50 mph (80 kph), that penetrated less than 3 ft (0.9 m). A manufacturer tested a third model, using a 15,000-lb (6,818-kg) vehicle, traveling at 50 mph (80 kph), that penetrated less than 3 ft (0.9 m).

Figure 6-5 Example High-Security Barricade System (Wedge Type)

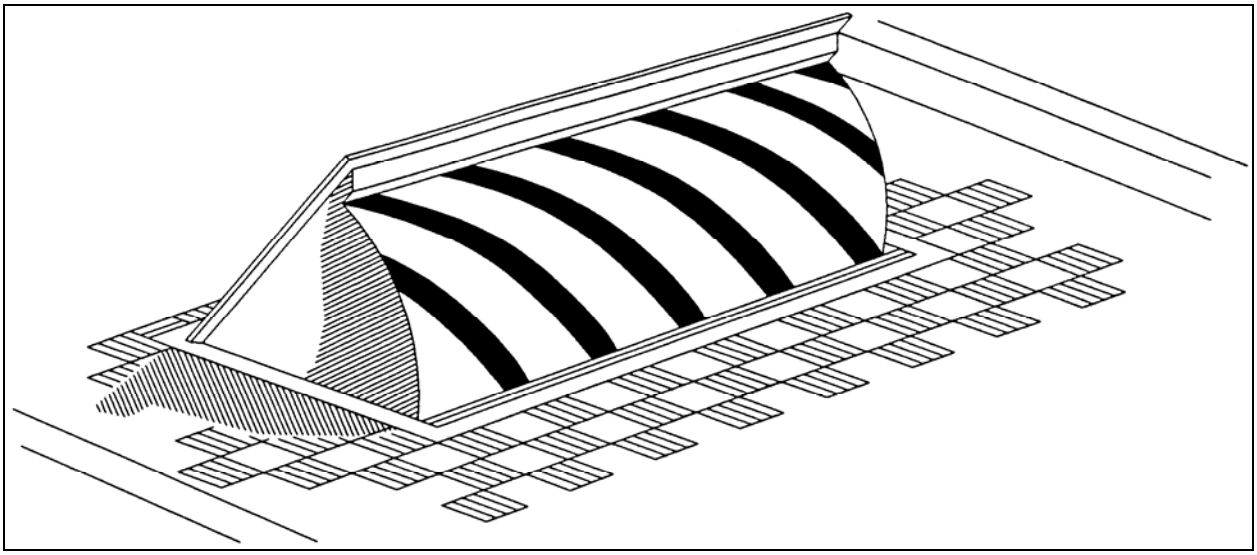

Figure 6-6 Example High-Security Barricade System (Flush-Mounted)

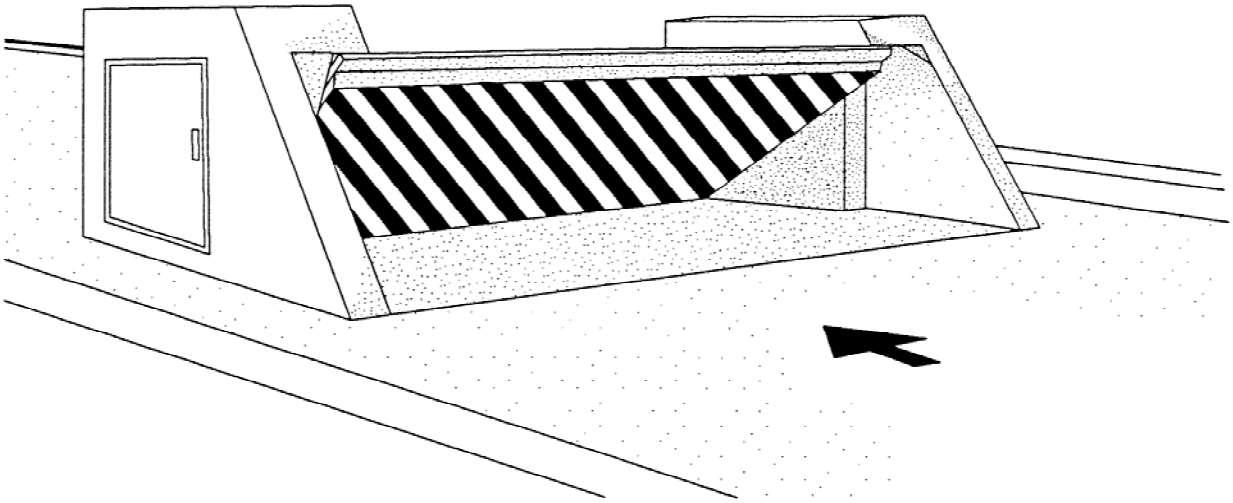

Table 6-2 Performance Data for Example High-Security Barricade System

	Example System*	Example Flush-Mounted System*
Height, in. (cm)	38 (96)	36 (91)
Width, in. (cm)	84 to 144 (213 to 366)	144 (366)
Normal operating cycle (seconds)	3 to 15	3 to 15
Emergency operating cycle (seconds)	<1.5	<1.5
Kinetic energy absorbed in impact testing, ft-lbf (kgf-m) x one million	1.2 (0.16)	1.2 (0.16)
Kinetic energy rating by engineering analysis, ft-lbf (kgf-m) x one million (destruction of vehicle with some damage to barrier)	4.0 (0.55)	3.2 (0.44)

*DoS certified

6-1.3 **Bollard System**.

6-1.3.1 **Description**.

Numerous manufacturers now produce DoS-certified bollard systems which have been formally crash-tested. A summary of the DoS-certified barriers is included in Appendix B. The manufacturers can provide crash data for DoS-certified models. The example bollards shown in Figure 6-7 are 10-in (25.4-cm) diameter steel bollards that are 30 in. (0.76 m) high. They can be lifted into position either manually (60-lb (27-kg) pull) or hydraulically. The compact size and ease of operation make this system particularly well-suited as either a stand-alone or a backup to existing pedestrian gates in the single post configuration. They can also be used to secure wide entrances when the cost for installing larger systems becomes prohibitive. Flush mount top of bollard system to surrounding pavement is required.

Hydraulically-operated bollards can be operated individually or in sets, with up to 24 bollards controlled from a single hydraulic power unit. Typical performance data are shown in Table 6-3.

6-1.3.2 **Testing**.

Sandia National Laboratories tested an example model with a 15,180-lb (6,900-kg) vehicle at 32 mph (51 kph), penetrating the barrier 12.2 ft (3.7 m). An example model

was tested by the NFESC and DoS with a 10,000-lb (4,545-kg) vehicle at 40 mph (64 kph) that failed to penetrate the barrier.

Figure 6-7 Example Bollard System

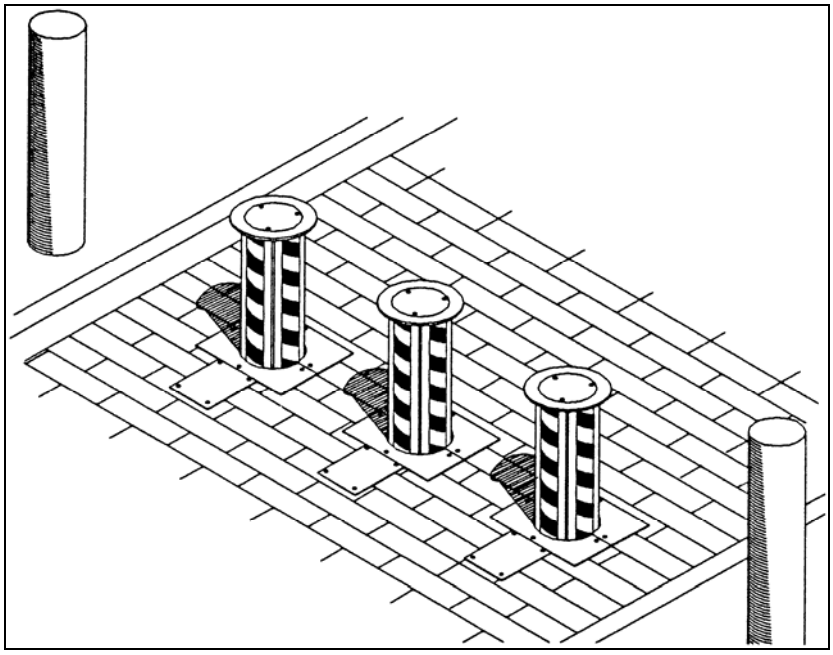

Table 6-3 Performance Data for Example Bollard System

	Example *
Height, in. (cm)	30 (76)
Width, in. (cm)	10 (25) @ 2 ft (0.6 m) on center
Normal operating cycle (seconds)	3 to 15
Emergency operating cycle (seconds)	<1.5
Kinetic energy absorbed in impact testing, ft-lbf (kgf-m) x one million	0.445 (0.06)
Kinetic energy rating by engineering analysis, ft-lbf (kgf-m) x one million (destruction of vehicle with some damage to barrier)	1.9 (0.26)

*DoS certified

6-1.4 **Crash Beam Barrier System**.

6-1.4.1 **Description**.

Numerous manufacturers now produce DoS-certified crash beam barrier systems which have been formally crash-tested. A summary of the DoS-certified barriers is included in Appendix B. The manufacturers can provide crash data for DoS-certified models. Crash beam barrier systems, such as the one shown in Figure 6-8, are cable-reinforced, manually or hydraulically-operated, bollard-mounted barriers. The beam is counterbalanced and lifts at one end to allow vehicle access. This system is frequently used for low impact conditions (when vehicle speed can be limited) and as the interior barrier (after a primary high impact barrier) for vehicle inspection areas or sally ports. Typical performance data for an example barrier are shown in Table 6-4. See "Barrier Operations" paragraph, 5.19, for specific operation requirements for crash beam systems.

Figure 6-8 Cable-Reinforced Crash Beams

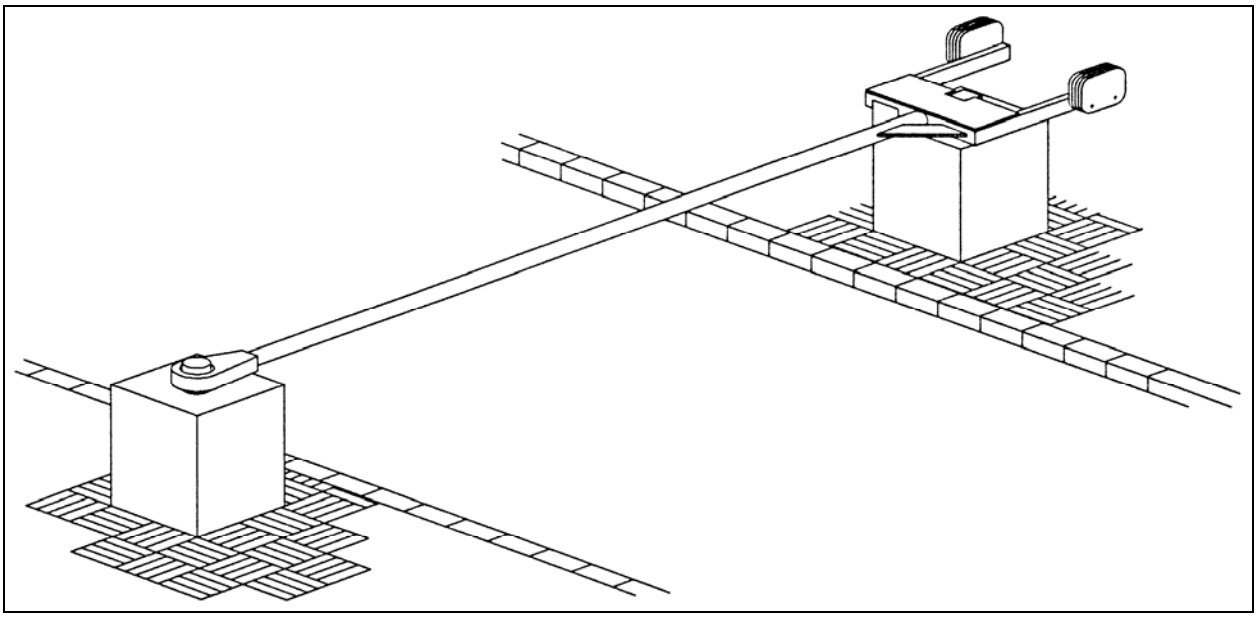

Table 6-4 Performance Data for Cable-Reinforced Crash Beams

	Example Model
Height, in. (cm)	30 (76) to 36 (91)
Length, in. (cm)	120 (305) to 240 (610)
Normal operating cycle (seconds)	8 to 15
Emergency operating cycle (seconds)	Not available
Kinetic energy absorbed in impact testing, ft-lbf (kgf-m) x one million	0.0965 (0.013)

6-1.4.2 **Testing**.

The example crash beam barrier has been tested by the NFESC at the China Lake test facility. A 10,000-lb (4,545-kg) vehicle at 17 mph (27 kph) impacted the sample barrier and rebounded. There is now a K12 certified crash beam barrier system available as well.

6-1.5 **Crash Gate System**.

6-1.5.1 **Description**.

A crash gate system, such as the example system illustrated in Figure 6-9, is a sliding gate that offers pedestrian access and resistance to heavy vehicle impact. The example system is electromechanically operated with a 30 to 100 ft/min (9 to 30 m/min) sliding speed (instantly reversible). Safety infrared sensors and front edge obstacle sensors are standard features. A tested manual version of a crash gate is also available. Gate systems are normally used where aesthetics is an issue or where wide opening is required [up to 25-ft (7.6 m) clear opening]. Most systems can be used for both portable and permanent construction. Typical performance data are shown in Table 6-5.

Figure 6-9 Example Linear Crash Gate

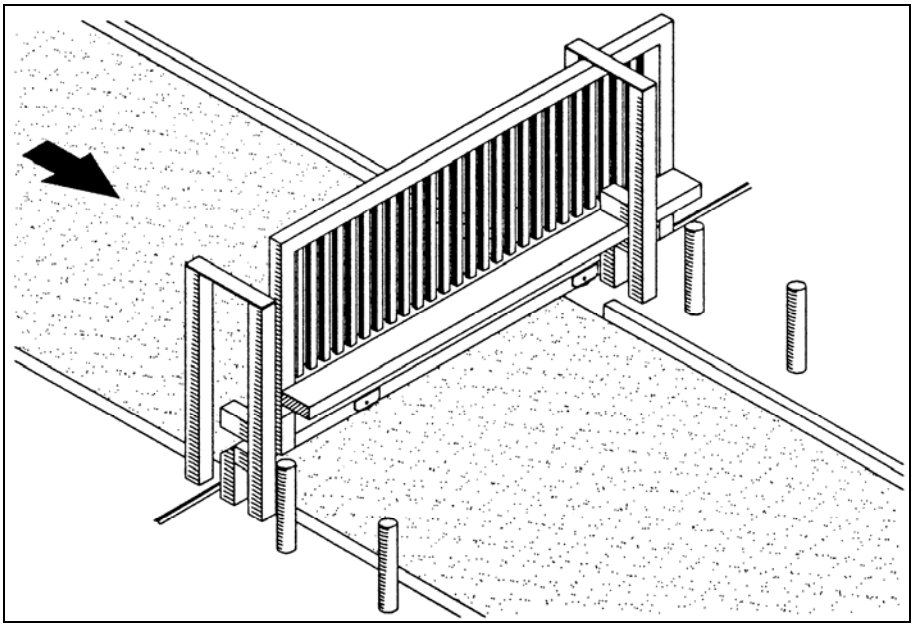

Table 6-5 Performance Data for Example Linear Crash Gate

	Example System*
Height, in. (cm)	108 (274)
Length, in. (cm)	144 (365) to 300 (762)
Normal operating cycle (Ft (m) per minute)	30 (9) to 100 (30)
Emergency operating cycle (seconds)	Not applicable
Kinetic energy absorbed in impact testing, ft-lbf (kgf-m) x one million	1.2 (0.16)

*DoS certified

6-1.5.2 **Testing**.

Three tests have been conducted on the example crash gate system by the NFESC, in conjunction with DoS, using vehicles weighing approximately 15,000 lbs (6,818 kg). At speeds of 34 and 40 mph (55 and 65 kph), the vehicle did not penetrate the sliding gate. At 55 mph (89 kph), the vehicle penetrated the sliding gate 5.5 ft (1.7 m).

6-1.6 **Ground Retractable Automobile Barrier (GRAB)**.

6-1.6.1 **Description**.

A ground retractable barrier is an attenuating device designed to span a roadway or traffic lane to bring an encroaching vehicle to a controlled stop and prevent its passage. An example system consists of a steel anchor post at each end, four hydraulic energy absorbers, and a cable/net assembly. The anchor posts are made from two sections of A36 steel pipe – a fixed 25-mm thick inner pipe with a 305-mm outer diameter and a 19-mm thick, 381-mm outer diameter outer pipe, free to rotate around the anchor post. Reusable hydraulic cylinders are set between the anchor posts and the net (two at each end). The net consists of upper and lower 19-mm diameter Extra High Strength (EHS) wire strands, with a 16-mm diameter wire rope in the center and 16-mm diameter wire rope woven up and down along the width of the net and attached to the top, middle, and bottom cables with clamps.

6-1.6.2 **Testing**.

The example GRAB was tested to the National Highway Research Program (NCHRP) Report 350 test level 2, with both the 1,800-lb (820-kg) car and the 4,400-lb (2000-kg) truck impacting at the third point of the net at a nominal speed of 45-mph (70 km/h). Both vehicles were stopped smoothly with no significant roll, pitch, or yaw. The maximum dynamic deflection of the example GRAB was 20.7 ft (6.3 m) with the car and 21.7 ft (6.6 m) with the truck.

6-1.7 **Maximum Security Barrier (MSB)**.

6-1.7.1 **Description**.

The MSB vehicle barrier (see example in Figure 6-10) is a hydraulically-operated barrier, 31 in. (79 cm) high by 14 ft (4.3 m) wide. It has a fully electronic, programmable controller that provides a range of functions. Multiple barriers can be controlled from a single hydraulic power system. Typical models can be moved without roadway rebuilding. Installation can be completed in 24 hours by bolting the barriers to the roadway. Some specific models are certified by DoS.

This type of barrier can also be an underground, flush-mounted barrier, as shown in Figure 6-11. Most MSB models are similar in construction and operation, varying only in the height of the barrier and surface foundation pad construction. Typical performance data are shown in Table 6-6.

The MSB also is available as a surface-mounted barrier with a gate arm. It has been crash-tested by the manufacturer. This system is frequently used for low impact conditions (when vehicle speed can be limited) and as the inside barrier (after a primary high impact barrier) for vehicle inspection areas or sally ports. Typical performance data are shown in Table 6-6.

Figure 6-10 Example MSB Vehicle Barrier (Lift Plate Barricade System)

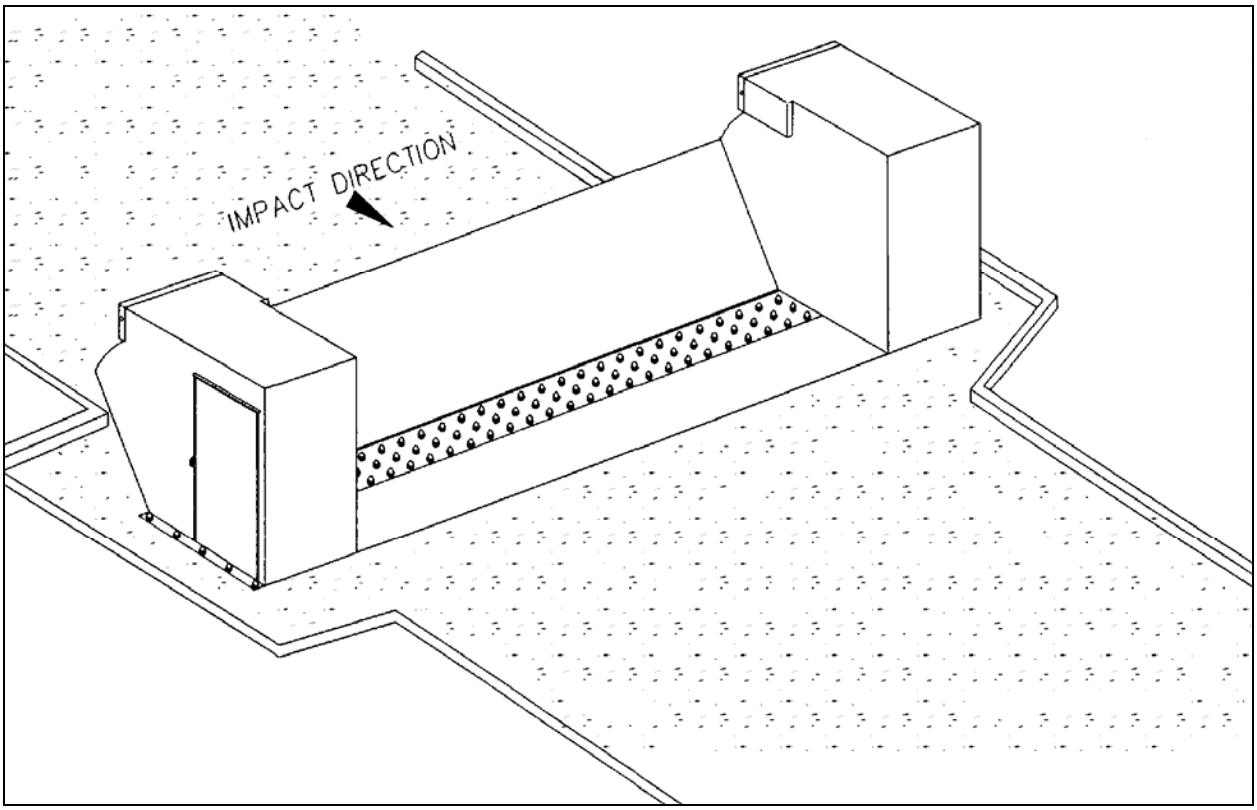

Figure 6-11 Second Example MSB Vehicle Barrier

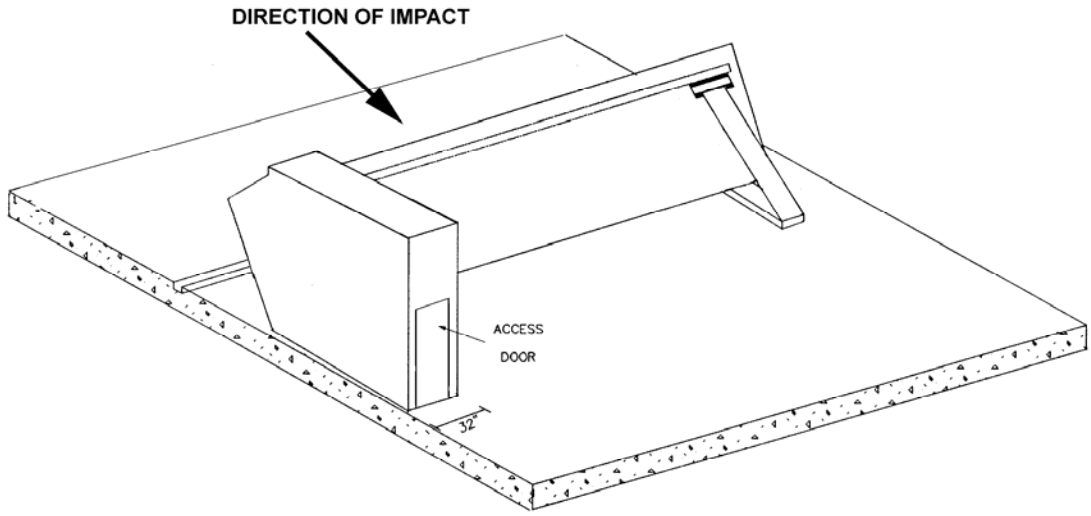

Table 6-6 Performance Data for MSB Vehicle Barriers

	Example 1*	**Example 2***
Height, in. (cm)	31 (79)	33 (84)
Width, in. (cm)	168 (427) 10 ft (3m) clear	168 (427) 10 ft (3m) clear
Normal operating cycle (seconds)	3 to 5	3 to 5
Emergency operating cycle (seconds)	1	1
Kinetic energy absorbed in impact testing, ft-lbf (kgf-m) x one million	1.2 (0.16)	1.2 (0.16)

*DoS certified
NA = Not Available

6-1.7.2 **Testing**.

The Example 1 barrier was tested by NFESC in conjunction with DoS. A 14,980-lb (6,809-kg) vehicle at 50.3 mph (81 kph) failed to penetrate.

6-2 **PASSIVE BARRIER SYSTEMS**.

The following is a compilation of passive vehicle barrier systems used at DOD facilities. Included are generic systems that can be constructed with the aid of self-help manuals, using standard, and locally available materials. Some of the systems have not been formally tested, but should inflict substantial damage on a vehicle if impacted. A consolidated list of passive barriers, kinetic energy, and penetration data is provided in Appendix E.

6-2.1 **Concrete-Filled Bollard**.

6-2.1.1 **Description**.

Passive steel bollards can be constructed locally and are an effective means of enhancing security against vehicular bomb attacks. Approved bollards are constructed of structural steel pipe filled with concrete. The steel pipe should have a minimum outside diameter of 8-in. (20-cm), 1/2-in. (1.2-cm) wall, and be a minimum of 7-ft (2.1-m) in length. The bollards should extend 3 ft (0.9 m) above the ground level from a continuous footing with minimum width of 2 ft (0.6 m), as shown in Figure 6-12 and 13. The bollards should be positioned 3 ft (0.9 m) ft apart on center (see example layout in Figure 6-. Bollards should never be placed on the un-secure side (outside) of a fence where they can be used as a climbing aid.

Figure 6-12 DOS Passive Anti-Ram Bollard Example

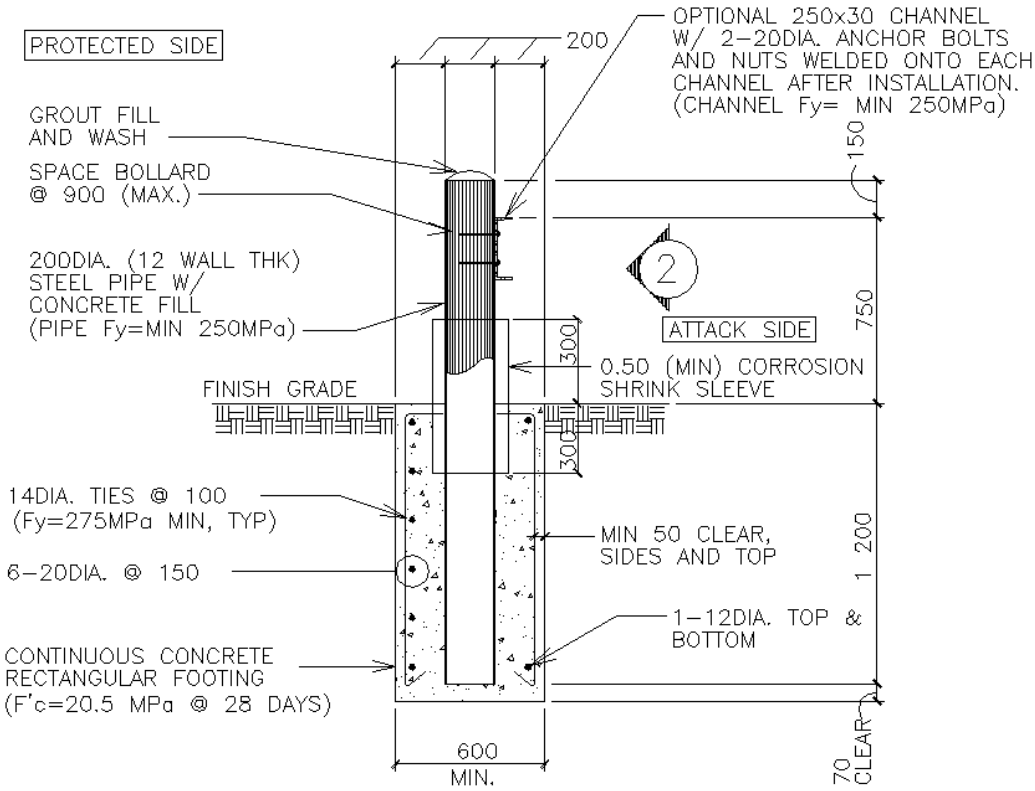

1 BOLLARD SECTION
SCALE = 1:20

NOTE: ALL DIMENSIONS IN MILLIMETERS.

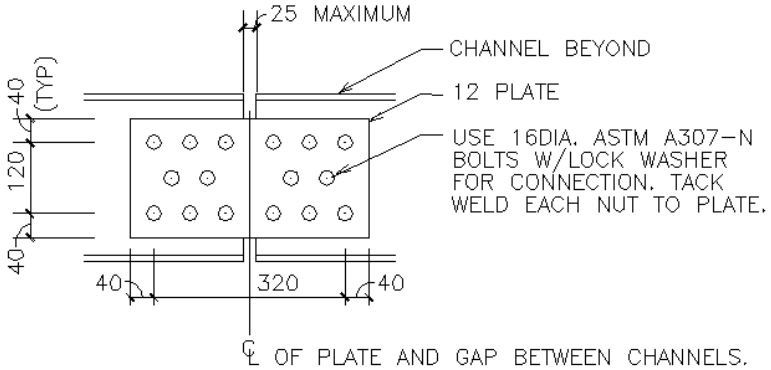

2 CHANNEL SPLICE DETAIL

NOTE: ALL DIMENSIONS IN MILLIMETERS.

Figure 6-13 Example Bollard Design Section

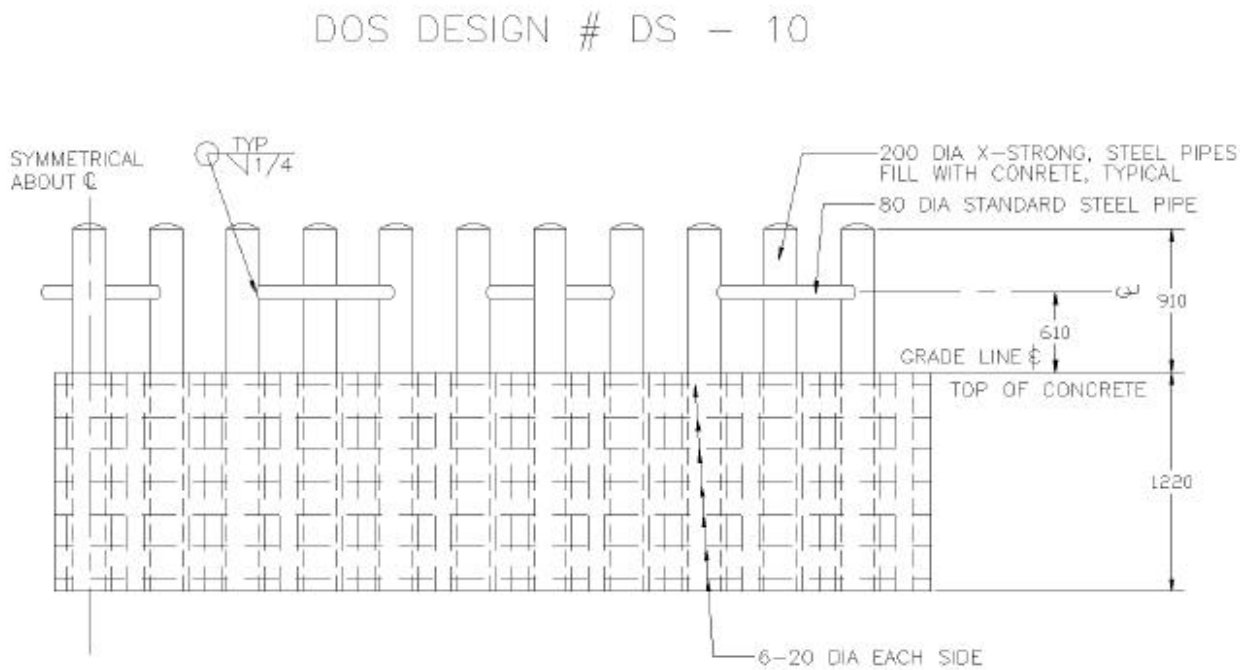

Figure 6-14 Bollard Design Example Layout in Plan View

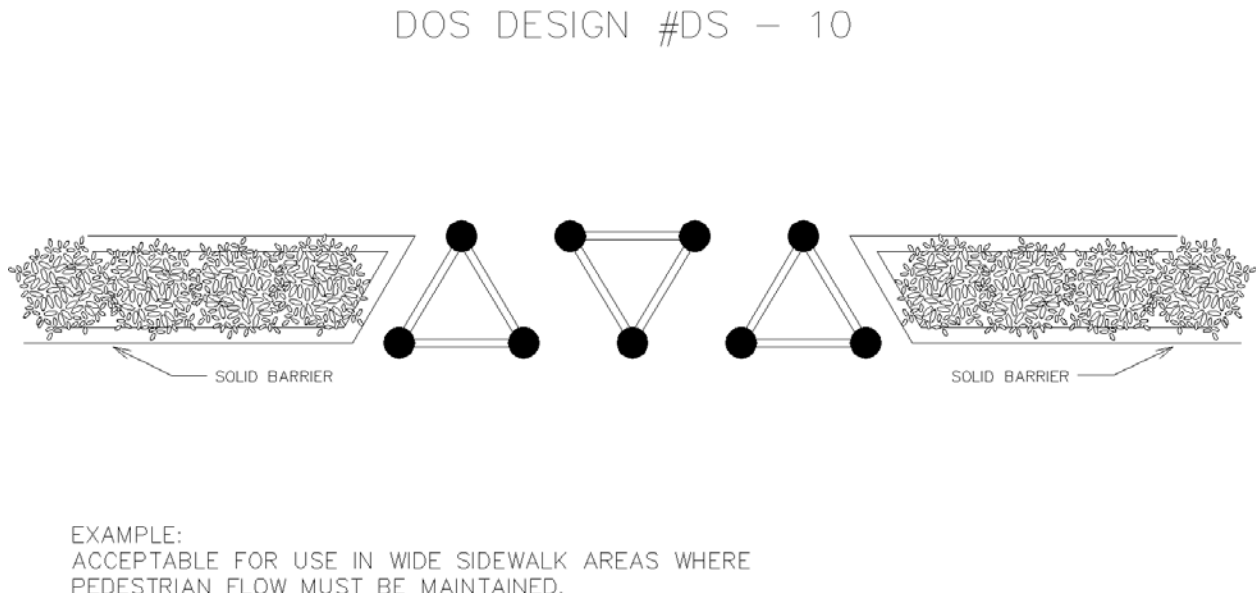

6-2.2 **Concrete Median**.

6-2.2.1 **Description**.

A concrete highway median (also known as a Jersey Bounce or Jersey Barrier) can be effectively used as a perimeter vehicle barrier, but only if the medians are securely fastened together. It can either be erected from pre-cast tongue-and-groove sections or cast in place with special concrete-forming equipment. It is especially effective for impact angles less than 30 degrees and is appropriate for locations where access roads are parallel to the barrier. Complete penetration is possible with light vehicles; however, damage to the vehicle will be extensive. If the potential impact angle from threat vehicle is expected to exceed 30 degrees, anchor barrier to foundation. These barriers should be set in a concrete foundation, as shown in Figure 6-15. Also barriers need to be securely connected with a minimum of one 3/4 inch steel cable tying them together to be effective.

6-2.2.2 **Testing**.

A non-reinforced, anchored, concrete median barrier was tested with a 4,000-lb (1,818-kg) vehicle at 50 mph (81 kph). The vehicle penetrated the barrier 20 ft (6 m). The vehicle had extensive front-end damage, and the occupants would have received serious to critical injuries. During the impact, a section of the barrier was broken and overturned. These barriers should be set in a concrete foundation, as shown in Figure 6-15, for applications where the impact angle exceeds 30 degrees. The barriers need to be securely tied together to be effective.

Figure 6-15 Precast Non-Reinforced Concrete Median

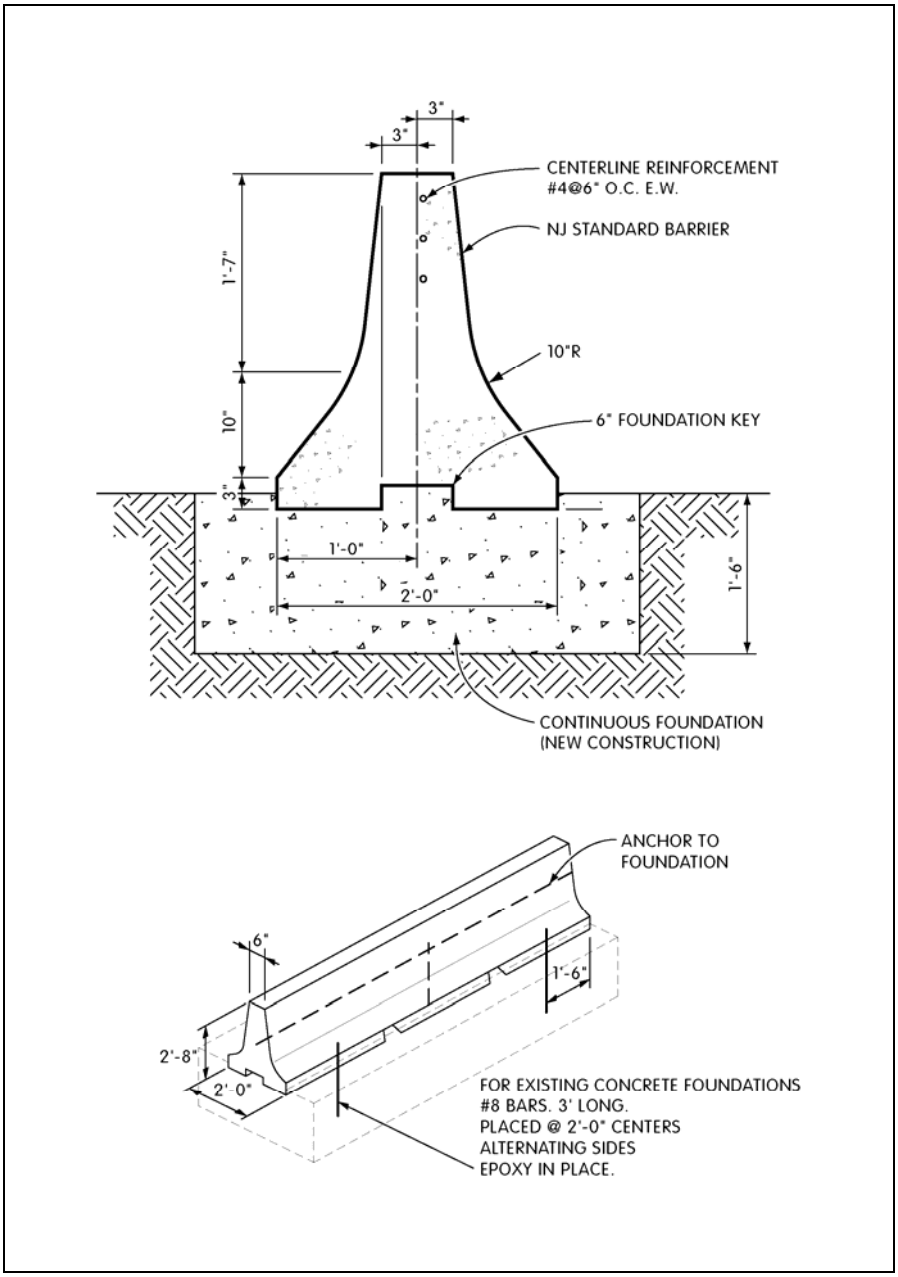

6-2.3 **King Tut Blocks**.

6-2.3.1 **Description**.

Non-reinforced concrete blocks can be used effectively as vehicle barriers or to slow the speed of oncoming vehicles, as shown in Figure 6-16. The placement of the blocks is shown in Table 6-7. These blocks can be cast in place and should be anchored to the ground so that movement or removal is difficult. Both Figure 6-16 and Table 6-7 are for passenger vehicles only. If trucks are considered, the ability to control POV speeds is lost. Thus, POV and truck traffic must be separated for optimum serpentine use.

Figure 6-16 Concrete Blocks

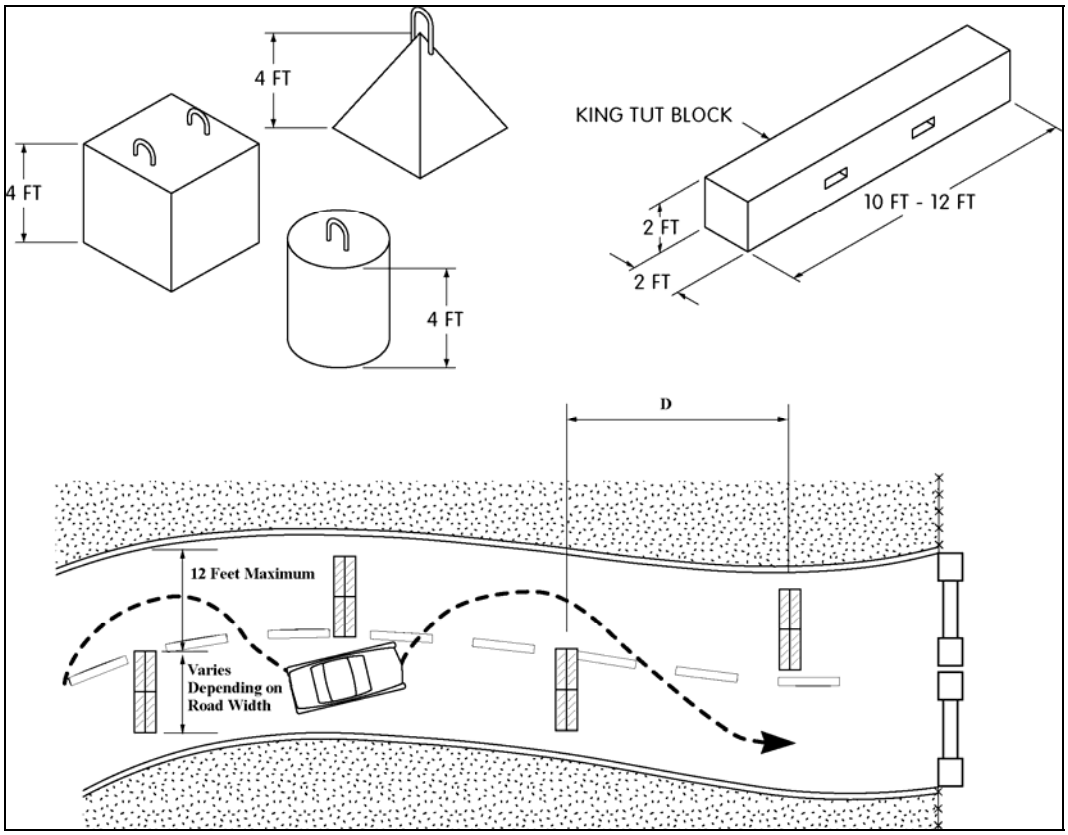

Table 6-7 Separation Distance (D)* for Barriers to Reduce Speed on a Straight Path in Ft (m)

Achievable Speed of Vehicle on a Curve in mph (kph)→ Road Width in ft (m) ↓	**20 (32)**	**30 (48)**	**40 (64)**	**50 (80)**	**60 (97)**
20 (6.1)	28 (8.5)	43 (13.1)	58 (17.7)	73 (22.2)	87 (26.5)
30 (9.1)	40 (12.2)	63 (19.2)	86 (26.2)	108 (32.9)	130 (39.6)
40 (12.2)	47 (14.3)	77 (23.5)	106 (32.3)	134 (40.8)	161 (49.1)
50 (15.2)	51 (15.5)	87 (26.5)	122 (37.2)	155 (47.2)	187 (57.0)
60 (18.3)	54 (16.5)	96 (29.3)	135 (41.1)	172 (52.4)	209 (63.7)

*Based on f=1.0

6-2.3.2 **Testing**.

No formal crash testing has been conducted; however, the mass of this type of concrete construction should perform at least as well as a concrete median (Figure 6-15).

6-2.4 Concrete Planter.

6-2.4.1 Description.

A concrete planter barrier (Figure 6-17) offers permanent protection from vehicle penetration and can also be aesthetically pleasing.

Figure 6-17 Reinforced Concrete Planter

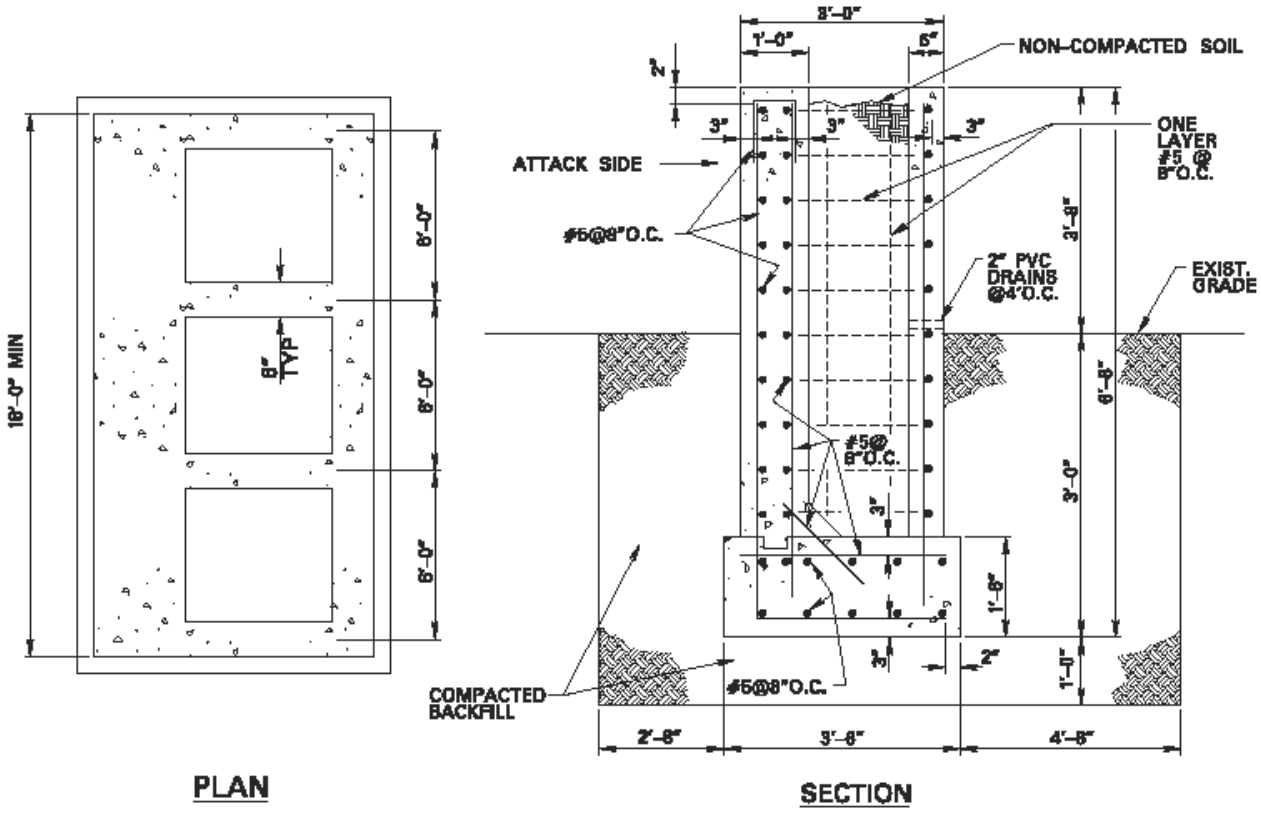

6-2.4.2 Testing.

This barrier was tested with a 15,000-lb (6,818-kg) vehicle traveling at 47 mph. The vehicle did not penetrate the barrier. The planter is DoS K12 certified.

6-2.5 Excavations and Ditches.

Ditches offer a simple method of rapidly securing a lengthy perimeter against a moving vehicle tactic. They can function as permanent anti-vehicle barriers if the required ditch profile is well maintained, or they can provide a temporary barrier before another permanent vehicle barrier system is installed. The ditch profile, including the approach slope, is critical to its ability to function as a vehicle barrier.

There are two vehicle attack methods against a ditch; 1) a slow covert attack where the vehicle attempts to cross the ditch by approaching at a oblique angle almost parallel to the ditch and going down and then up along the profile of the ditch, and 2) a fast attack where the vehicle approaches perpendicular to the ditch at high speed and attempts to jump the ditch. In the latter case, the flexibility in the vehicle suspension system and inertia of the vehicle can allow the front wheels to roll over the far edge of the ditch even if they do not fully clear the ditch. Also ditches are vulnerable to coordinated attacks, where the ditch profile is modified in the initial attack and then a moving vehicle attack is mounted across the ditch before it can be repaired.

Soil berms adjacent to the protected side of the ditch provide additional resistance to vehicle attack but they also can make the ditch a more effective hiding place for attackers on foot. This negative aspect of berms is less significant when there are elevated observation positions near the ditch. Soil berms and placement of spoil from ditch excavation on the attack side of the ditch should not be used because they provide a ramp effect, or launch angle over the ditch for a fast vehicle attack, increasing the capability of a vehicle to jump the ditch.

Numerous profiles for anti-vehicular ditches have been proposed in previous DoD documents, that were based on ditches used primarily to slow tank attacks. These profiles were not tested against simulated moving terrorist vehicle bombs until recently when similar ditches, tested in the United Kingdom, mostly failed to stop a sport utility vehicle (SUV) - type vehicle moving at 50 mph. The following conclusions were determined from the United Kingdom tests:

a. Asymmetric V-shaped ditches with an inclined angle greater than 65 degrees and a total width and depth equal or greater than 5 m and 1.2 m, respectively, were able to stop the test vehicle.

b. The approach terrain on the attack side of the ditch should not have any incline or spoil and preferably should have a slight decline.

c. Ditches will stop a fast vehicle attack provided the vehicle drops more than 75% of its wheel diameter in the space provided.

d. A modern 4x4 vehicle (i.e. SUV or Range Rover) can negotiate much steeper slopes than can be made in unreinforced soils.

e. Trapezoidal ditches should be avoided in general due to a concern that a vehicle can drive in and out of the ditch in a slow attack

Unfortunately, the United Kingdom tests were not part of a comprehensive design project for anti-vehicular ditches that allowed the ditch profile to be optimized based on both resistance to moving vehicle attack and practical construction considerations. A study by NAVFAC was conducted to use observations from the United Kingdom tests, simple analyses of moving vehicle trajectories over various ditch profiles, and a survey of large commercial vehicle geometry information to design the three anti-vehicular ditches shown in Figure 6- through Figure 6-20. In all three figures, the protected side of the ditch is on the left.

Figure 6-18 Anti-Vehicular Ditch Profile with Incline Slope Requiring Stabilization

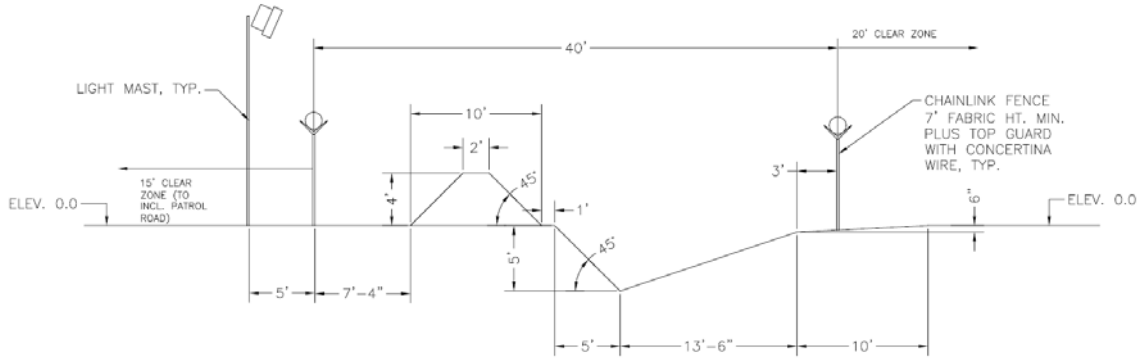

Figure 6-19 Anti-Vehicular Ditch Profile with Maximum Incline Slope Not Requiring Stabilization

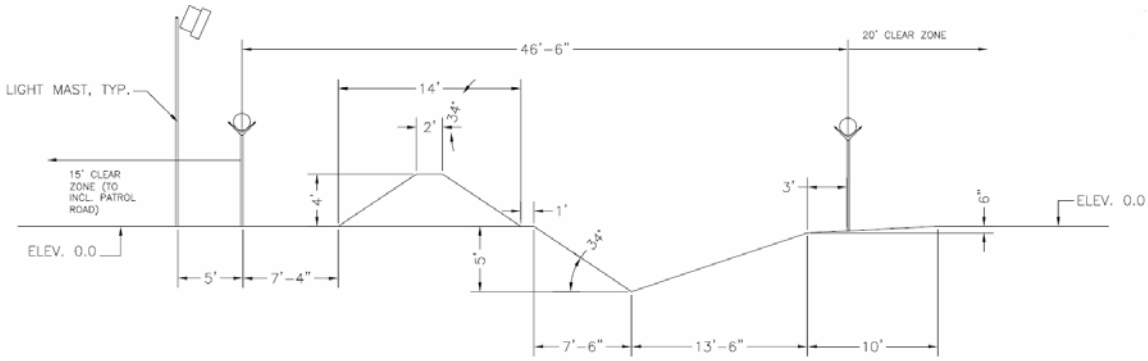

Figure 6-20 Anti-Vehicular Ditch Profile with Maximum Incline Slope Not Requiring Stabilization or Berm

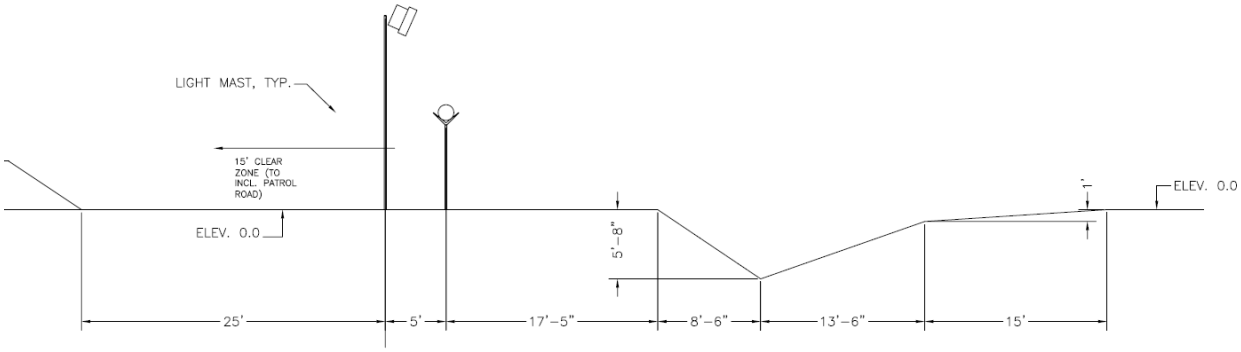

Trajectory simulations of a ___ lb vehicle at velocities up to 50 mph showed that the vehicle impact angle relative to the inclined slope on the far side of the ditch was at least 43 degrees for all the ditch profiles in Figure 6-18 through

The trajectory simulations were based on a simple physics derivation that ignored air resistance and specific vehicle geometry characteristics. Figure 6-21 shows a trajectory analysis where the approach angle at impact for the vehicle at 50 mph is 43 degrees. This approach angle is sufficient to prevent the front bumper from clearing the top edge of ditch for a range of commercial utility vehicles including Jeeps, Land Rovers, SUV's, and Hummers (except a Hummer 1) based on a limited survey of the geometry of these vehicles by NAVFAC Atlantic. This survey also indicated that a 42 degree side slope or greater was sufficient to cause all the surveyed vehicles to tip if they were trying to make a cross the ditch at an oblique angle in a covert attack.

Figure 6-21 Simulated Trajectory Path and Impact Angle with Ditch Incline Slope for Vehicle at Two Speeds

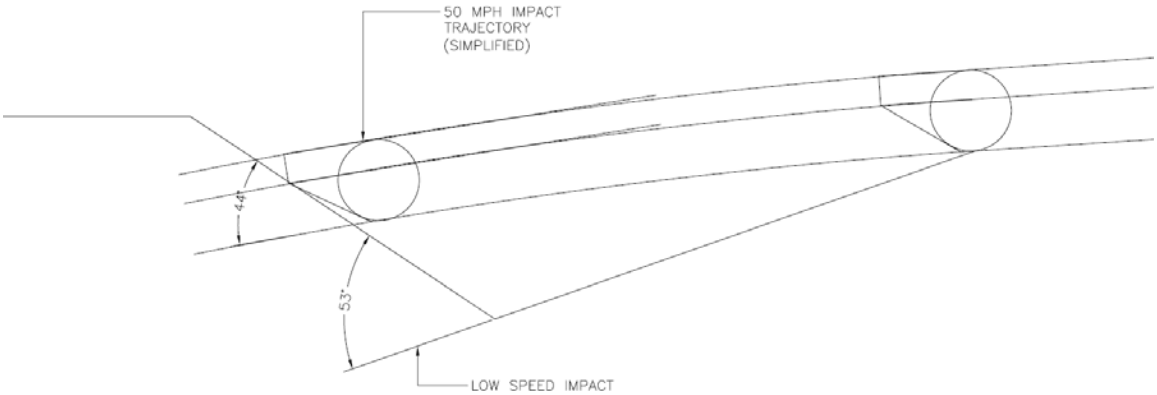

The most vehicle survey focused on the lower bumper reference line height of the vehicles, which affects the maximum approach impact angle that could allow a vehicle

to clear the ditch, and the maximum side slope angle. The approach angle and lower bumper reference line are illustrated in Figure 6-21 from the International Organization of Motor Vehicle Manufacturer's (OICA). Based on a limited survey of SUVs by the OICA, the lower bumper reference height ranged from 340 mm (13.4") to 500 mm (19.7"). This information was used with a survey of SUV vehicle specifications to determine maximum vehicle approach angles and side slope angles shown in Table 6-. The side slope in Table 6-8 is the transverse angle the vehicle can be at without tipping over.

Figure 6-22 Lower Bumper Reference Line and Vehicle Approach Angle

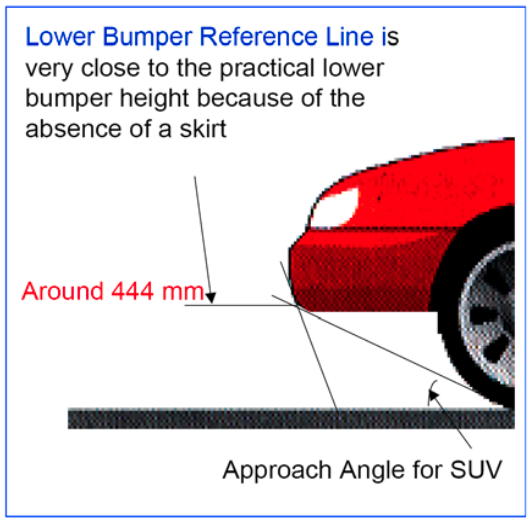

Table 6-8 Maximum Vehicle Approach Angles and Side Slope Angles

Vehicle	Maximum Approach Angle (degrees)	Maximum Side Slope Angle (degrees)
Jeep Liberty	38.1	
Jeep Commander	34	
Hummer H3	39.4	
Hummer H1	72	40
Hummer H2	41	40
Land Rover LR3	37	35
Toyota FJ Cruiser	34	41
Land Rover Range Rover	34	
Jeep Grand Cherokee	34	
Mercedes G-Class	36	28.4
Toyota 4 Runner	31	

The berms in Figure 6-18 and Figure 6-19 are essentially safety factors and they are recommended given the approximations in the analyses used to design the ditch profiles. The profile in Figure 6-18 provides the highest amount of resistance against a moving vehicle threat, but it requires a stabilized slope, such as concrete riprap or sand-bag cover, since natural soil cannot maintain a 45 degree slope. The profile in Figure 6-19 provides less resistance against a moving vehicle threat, but sandy soil can theoretically maintain a 34 degree slope. Finally, the profile in Figure 6-20 is similar to Figure 6-19 except that it does not have the additional safety factor of a berm for

stopping a moving vehicle threat. As mentioned previously, the berm may be considered unacceptable because it may provide a potential hiding place for attackers on foot. The declined approach slope in

helps, to some effect, to offset the reduced resistance to a moving vehicle threat caused by deletion of the berm.

6-2.6 **Guardrails**.

6-2.6.1 **Description**.

Standard highway guardrails or median barriers can be used as perimeter vehicle barriers (Figure 6-23). Guardrail design procedures can be found in the AASHTO Roadside Design Guide and AASHTO Geometric Design of Highways and Streets and in many state DOT standard drawings. Guardrails are normally designed to redirect vehicles approaching at angles less than or equal to 25 degrees.

A cable guardrail (AASHTO type G1) consists of three ¾-inch diameter steel cables, spaced 3 inches apart. The posts used are S3x5.7 steel, spaced at 16-ft intervals. The height, measured from the surface to the top rail, is 30 inches. From the end post, all three cables are turned down at a 45-degree angle and anchored to buried concrete deadmen.

A W-beam flexible guardrail (AASHTO type G2) consists of a 12 gauge “W” section bolted to S3x5.7 steel posts, spaced at 12 ft 6 in. intervals. A Blocked-Out W beam (AASHTO type G4) guardrail system uses a 12 gauge “W” section bolted to W6x8.5 posts, spaced at 6 ft 3 in. intervals. The AASHTO Guide for Selecting, Locating and Designing Traffic Barriers provides four post and blocking alternatives for this guardrail system. A thrie beam (AASHTO type G9) guardrail system consists of a steel thrie beam bolted to W6x8.5 steel posts at 6 ft 3 in. intervals.

A box-beam guardrail (AASHTO type G3) system consists of a 6 in. x 6 in. x 0.180 in. steel tube bolted to S3x5.7 steel posts, spaced at 6 ft 4 in. intervals.

Figure 6-23 Guardrails

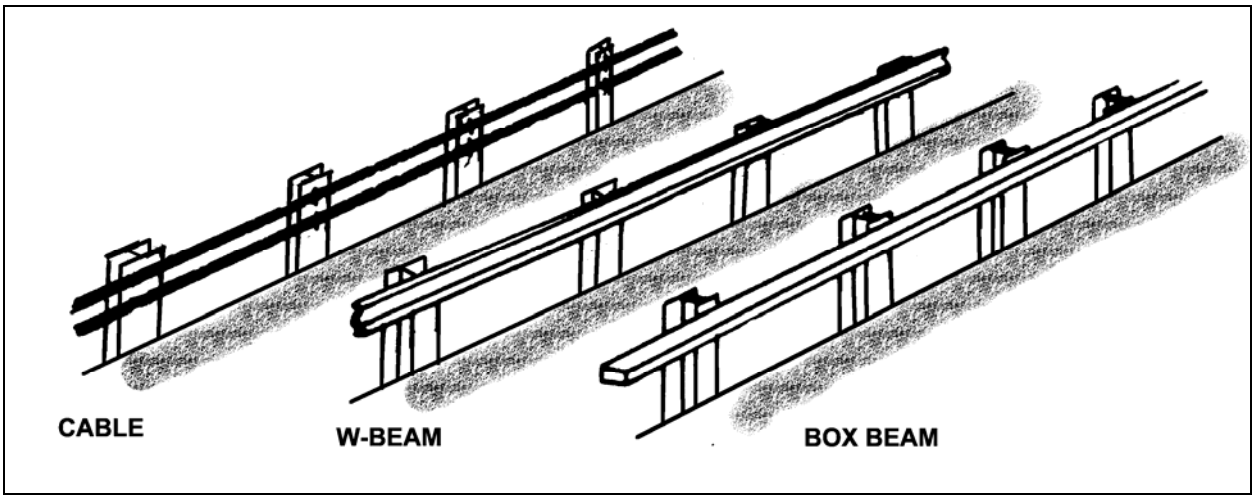

6-2.6.2 **Testing**.

The cable guardrail system successfully redirected both low profile 3,500 lb (1,587 kg) vehicles and a 4,100 lb (1,850 kg) van, as well as other 4,000 lb (1,814 kg) vehicles, during testing for impact angles of 25 degrees or less. Tests of the W beam system resulted in redirection of a vehicle with an impact angle of 25 degrees, but the redirected vehicle was airborne for a distance of 50 ft. During testing of the Blocked-Out W beam system, the barrier successfully redirected low profile vehicles with impact angles of equal to or less than 25 degrees. This system caused several vans and other vehicles with high centers of gravity to overturn after impact. Tests of the thrie beam system provided a smooth redirection of vehicles when the impact angle was 25 degrees or less. The box beam guardrail system tested provided excellent redirection of the vehicle.

6-2.7 **Heavy Equipment Tires**.

6-2.7.1 **Description**.

Heavy equipment tires, half-buried in the ground and tamped to hold them rigid, can be effective vehicle barriers (Figure 6-24). Use tires that are 7 to 8 ft (2.1 to 2.4 m) in diameter. Heavy equipment tires can usually be obtained locally from salvage operations for the cost of hauling them away.

Figure -6-24 Heavy Equipment Tire Barrier

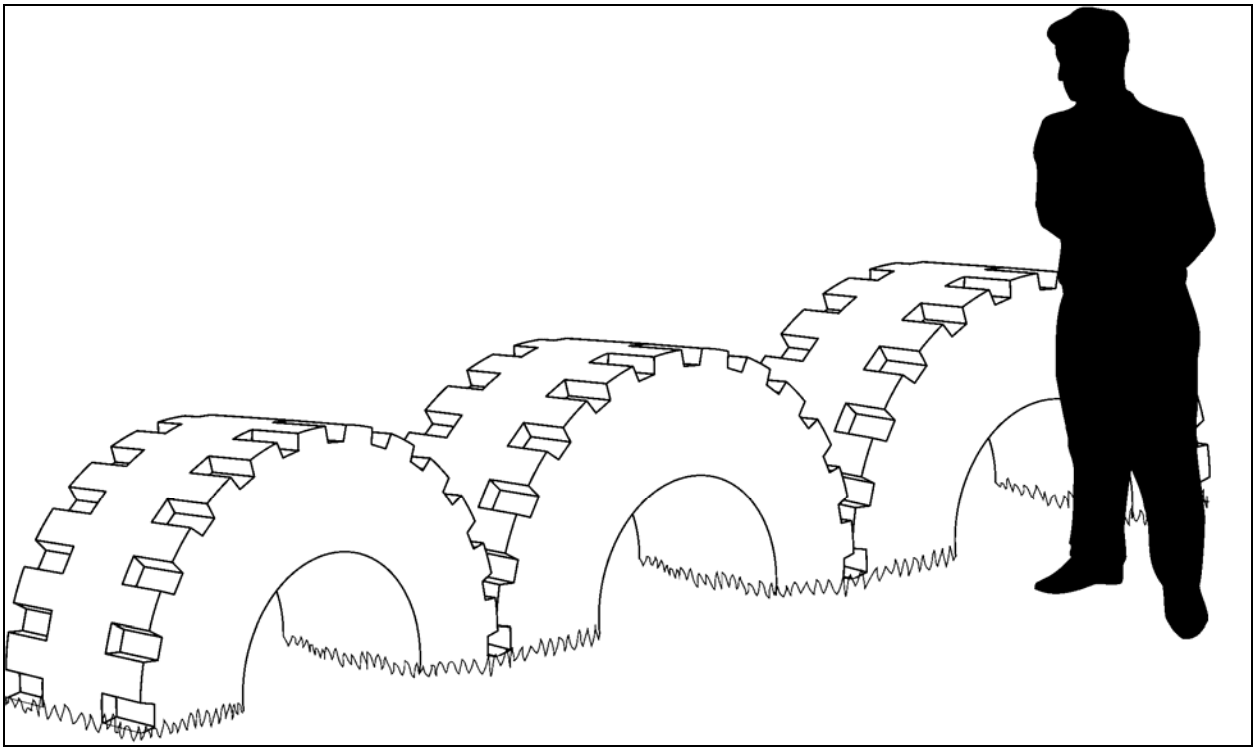

6-2.7.2 **Testing**.

Buried equipment tires were tested using a 3,350-lb (1,523-kg) vehicle traveling at 51 mph (82 kph). The vehicle penetrated the barrier 1-ft (0.3-m). The tires used were 36 ply, 8 ft in diameter (2.4 m), and weighed 2,000 lbs (909 kg) each.

6-2.8 **Tire Shredders**.

6-2.8.1 **Description**.

Tire shredders can be either surface-mounted or imbedded, as shown in Figure 6-25. These devices are normally used for traffic control purposes and are designed to slow or stop a vehicle by deflating their pneumatic tires. These units are available from a number of commercial manufacturers. Delta Scientific Corporation manufactures the unit shown in Figure 6-22. When a vehicle drives over the mechanism in the wrong direction, the spikes penetrate the tire casing, which quickly deflates the tires, making the vehicle difficult to operate for extended periods. These systems should not be considered vehicle barriers and are shown here only as an option for either slowing a vehicle prior to impact with a barrier or where two to three times the required standoff distance is available between the entry point and the protected structure. Tire shredders are not recommended where vehicle traffic drives over these devices at speeds exceeding 5 mph. These systems may also not be effective against modern “run flat” tires, heavy-duty truck tires, or extra-wide tires that can bridge over two or more spikes. In fact, tire shredders have a very limited capability to stop a vehicle.

Figure 6-25 Tire Shredders

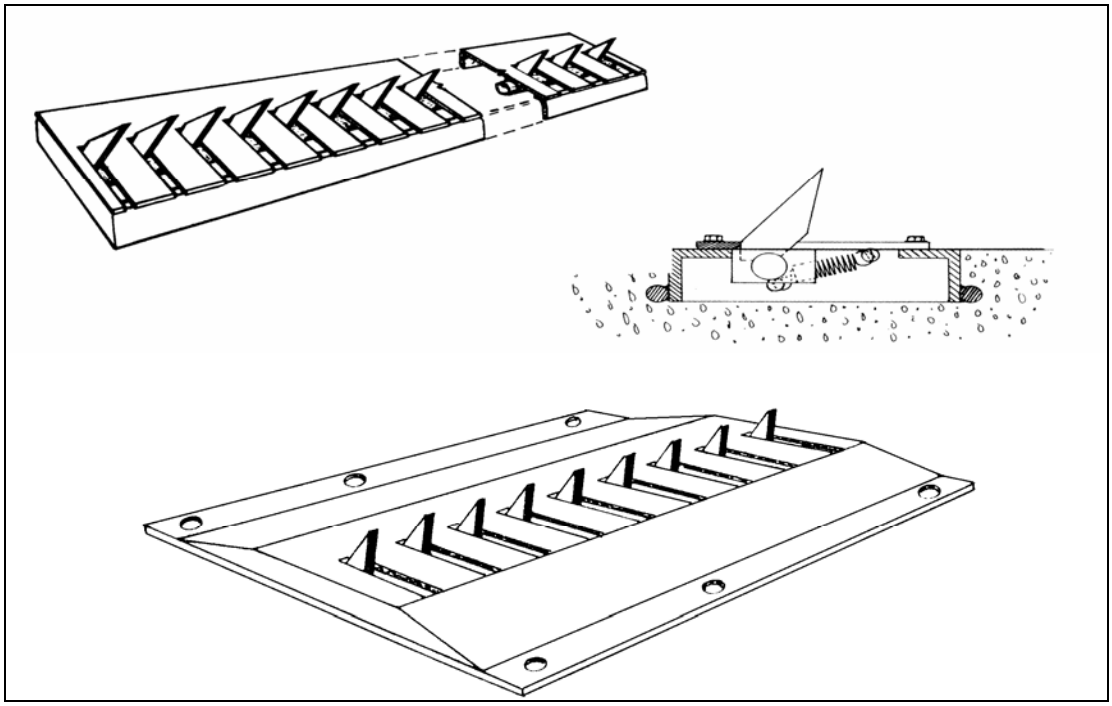

6-2.8.2 **Testing**.

These systems have not been formally tested, but should work as advertised unless the tires are modified to prevent deflation.

6-2.9 **Steel Cable Barriers**.

6-2.9.1 **Description**.

As shown in Figure 6-26, there are several configurations for steel cable barriers. Site requirements, configuration, and environment must be carefully considered prior to selecting a cable system for a particular application.

6-2.9.2 **Testing**.

Systems such as those shown in Figure 6-26 have not been formally tested. However, two 3/4-in. (1.9-cm) diameter cables attached to a 200-ft section of fence, minus fabric, with deadman anchors at both ends were tested with a 4,000-lb (1,818-kg) vehicle at 52 mph (84 kph). The vehicle was stopped within 13 ft (4 m) and then pushed back to the impact point. For additional considerations, details, and design guidance relating to the use of steel cables in fencing and gates, refer to UFC 4-022-03.

Figure 6-26 Steel Cable Barriers

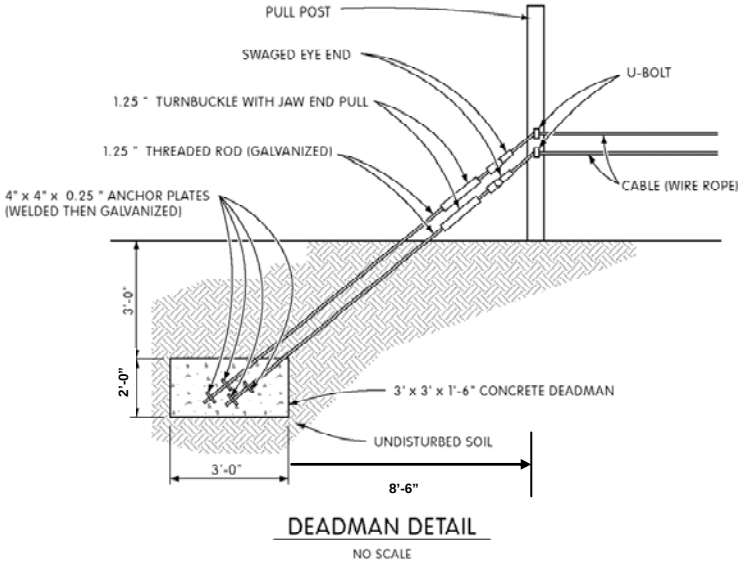

DEADMAN DETAIL

NO SCALE

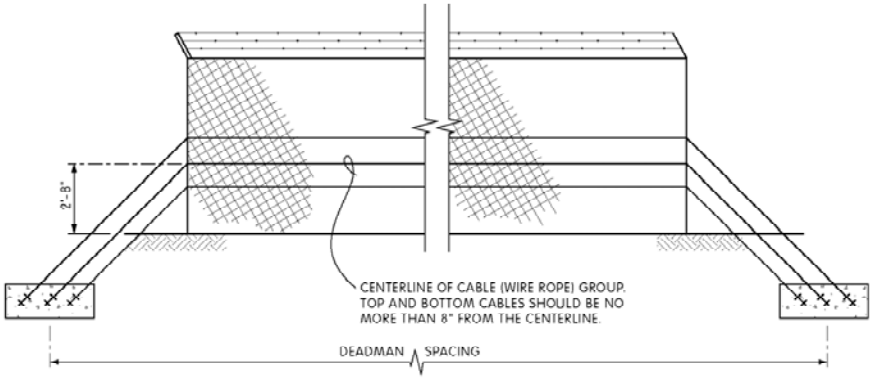

TYPICAL CABLE-RUN CABLE RESTRAINT SYSTEM

6-2.10 **Steel Cable-Reinforced Chain Link Fencing**.

6-2.10.1 **Description**.

Without some reinforcement, a standard chain-link fence can be penetrated easily by a light vehicle with little or no damage. However, standard fencing can be reinforced to provide a cost-effective method to protect against the threat of penetration by light vehicles, as in Figure 6-26 and Figure 6-27. Although no required pre-tension is specified for the cable, it is generally considered acceptable that it should be snug and not have significant sag. Routine (usually daily) perimeter inspection should include

checking for visible sagging. At this time, there is no specific sag measurement benchmark, so checking for "visible" sag is a conservative approach. Regularly scheduled inspections should also check for corrosion of fittings, including the turnbuckles, anchor bolts, U-bolts, any swaged fittings, and cable clamps. Cable clamps should be inspected as well to insure no nuts have become loose. For additional considerations, details, and design guidance relating to the reinforcing of fencing and gates, refer to UFC 4-022-03.

Figure 6-27 Typical Steel Cable Reinforced Chain-Link Fencing

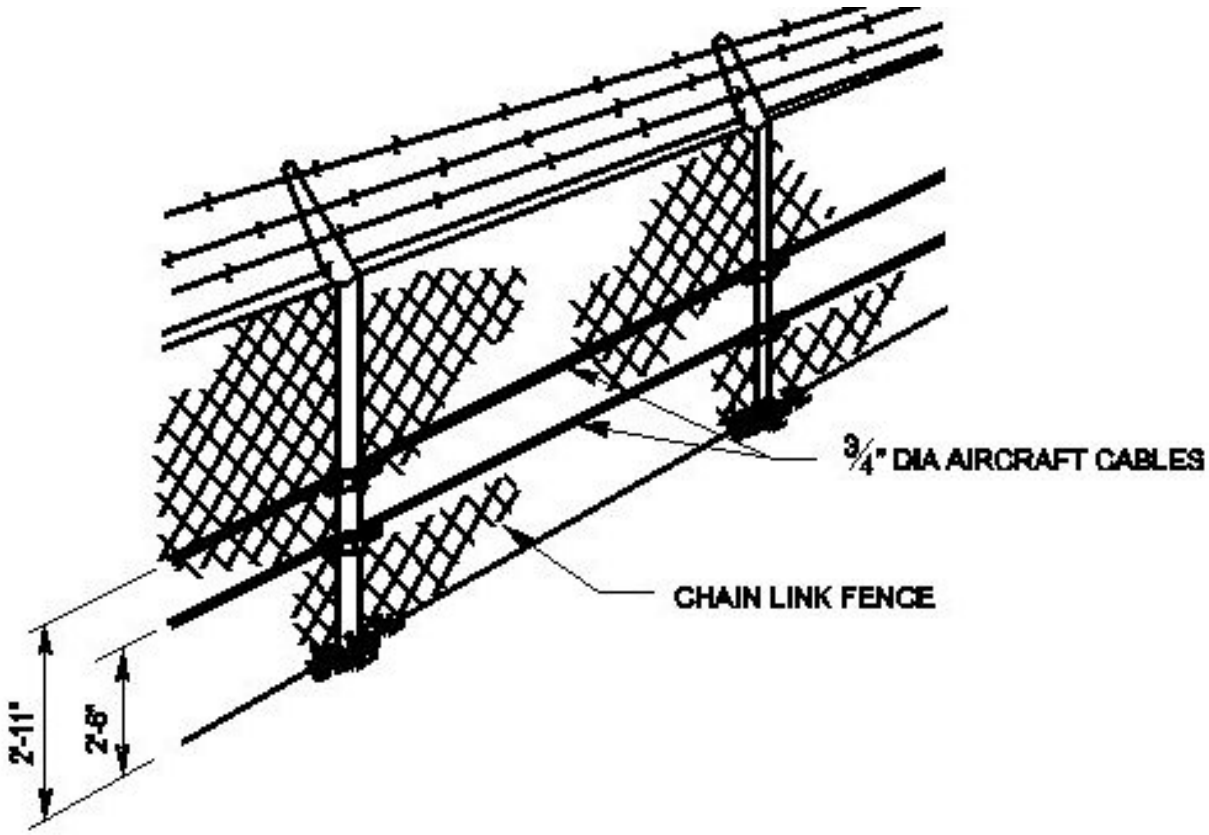

6-2.10.2 **Testing**.

Sandia National Laboratories tested a barrier consisting of a chain link fence reinforced with a 3/4-in. (1.9-cm) cable. In this test, a 3,350-lb (1,523-kg) vehicle traveling at 23.5 mph (38 kph) penetrated the barrier 7 ft (2.1 m). A 4,050-lb (1,841-kg) vehicle, traveling at 50.6 mph (82 kph), penetrated 26 ft (7.9 m), and the cable failed at the impact location. A test using two cables with no fabric was impacted by a 4,000-lb (1,814-kg) vehicle, traveling at 52 mph (84 kph), and the vehicle penetrated 13 ft (4 m) and then pushed back to the original fence line. Engineering analysis of various cable restraint configurations, using the BIRM computer model (PDC-TR90-2), is shown in Table 6-9.

Table 6-9 Performance of Cable Restraint Systems

Cable Barrier w/200-ft Anchorage Spacing	Kinetic Energy in ft-lbf x 1,000 (kgf-m)	Penetration in Ft (m)
1 Cable @ 3/4-in. dia.	100 (13.8)	40 (12.2)
2 Cables @ 3/4-in. dia.	200 (27.6)	40 (12.2)
3 Cables @ 3/4-in. dia.	338 (46.7)	40 (12.2)
4 Cables @ 3/4-in. dia.	418 (57.8)	40 (12.2)
1 Cable @ 1-in. dia.	150 (20.7)	40 (12.2)
2 Cables @ 1-in. dia.	340 (47.0)	40 (12.2)
3 Cables @ 1-in. dia.	506 (70.0)	40 (12.2)
4 Cables @ 1-in. dia.	706 (97.6)	40 (12.2)

6-2.11 **Reinforced Concrete Knee Walls**.

6-2.11.1 **Description**.

When a perimeter wall or fence line needs to also serve as a vehicle barrier, it must meet passive vehicle barrier standards. This can be achieved by using a reinforced concrete knee wall structure. A knee wall barrier is a wall resting on a footing. The entire footing and part of the wall are imbedded in the existing soil or in a crushed stone mix. Figures 6-28, 6-29 and 6-30 show representative cross sections of this type of barrier.

Figure 6-28 Anti-Ramming Foundation Wall

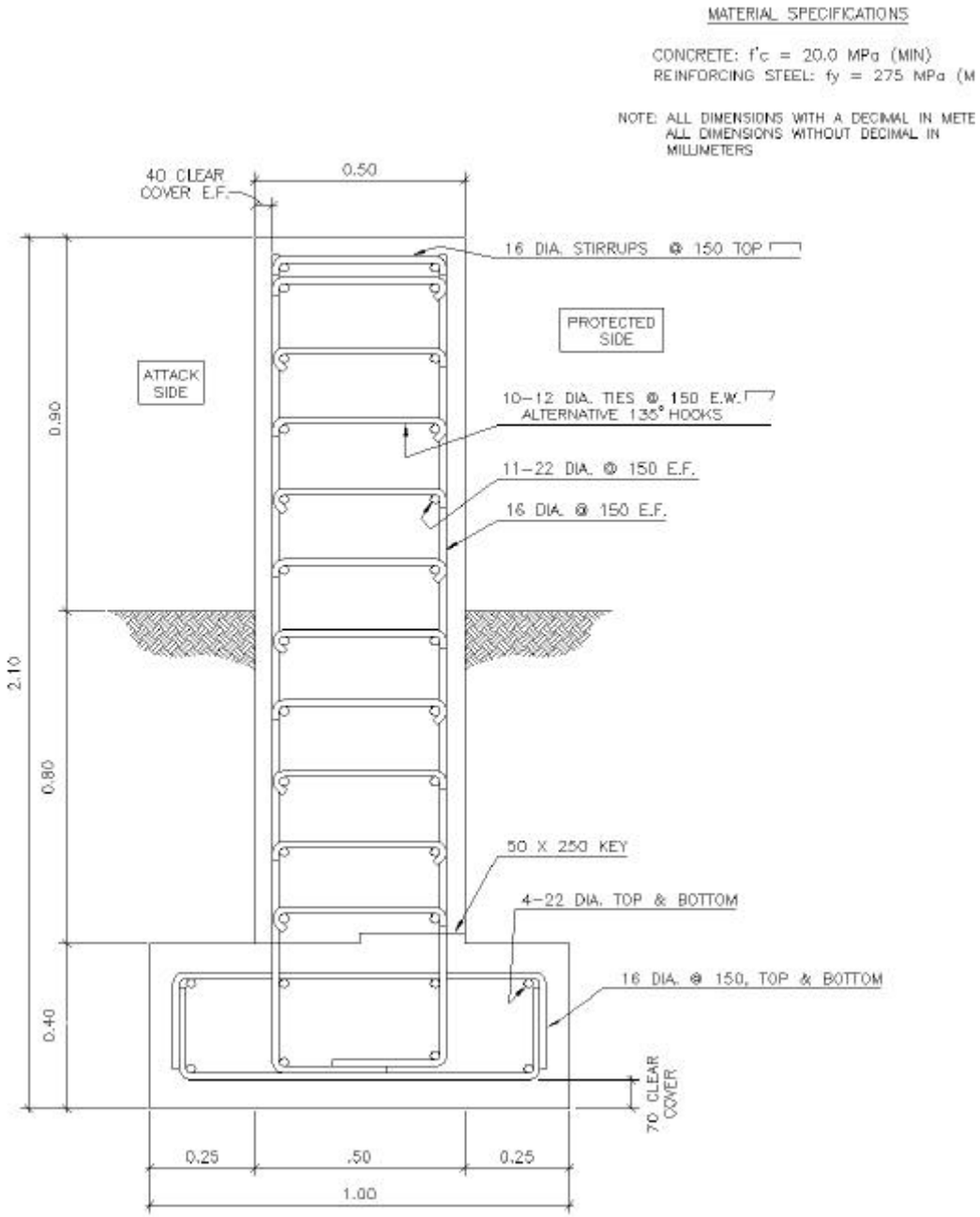

Figure 6-29 Anti-Ramming Knee Wall Section

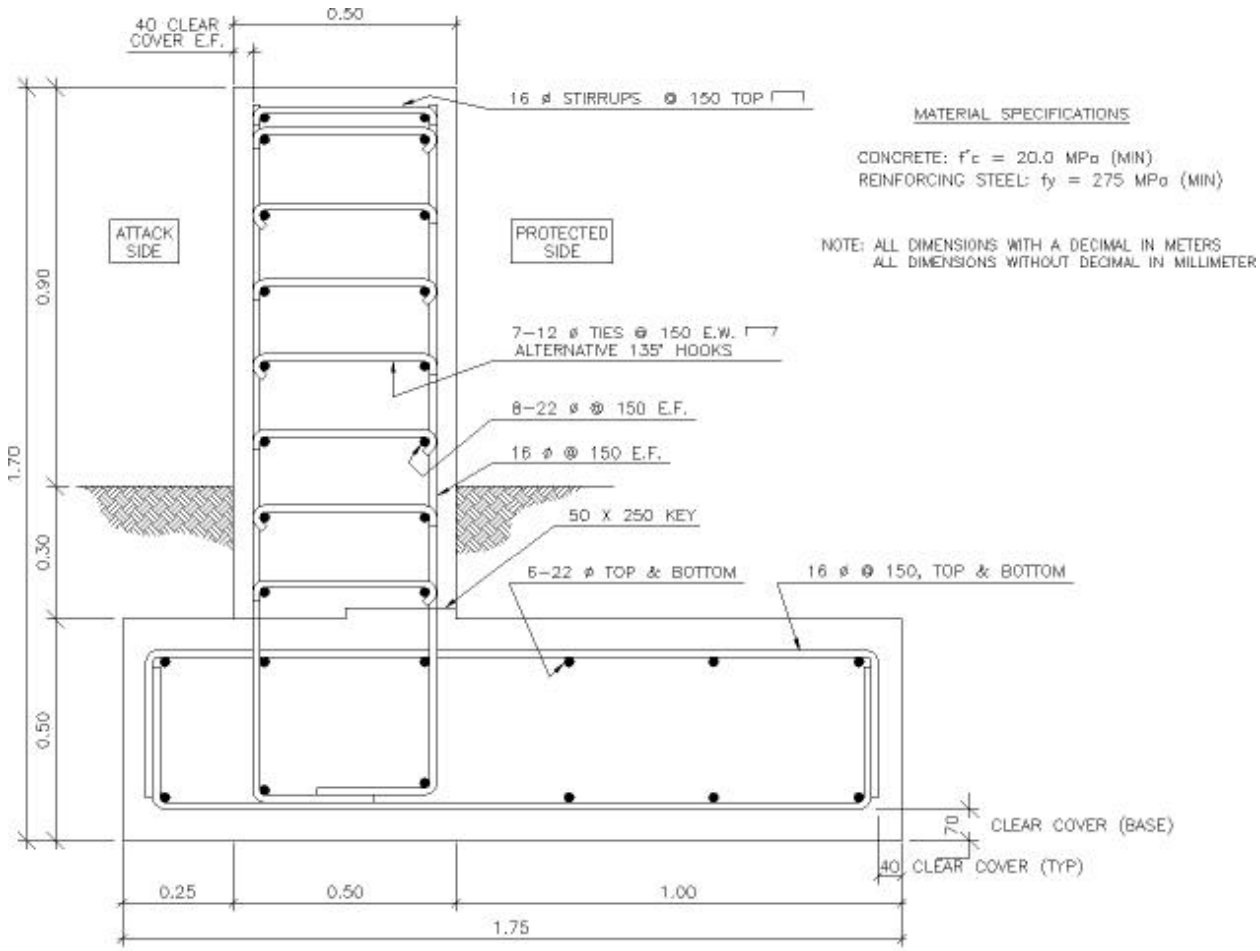

Figure 6-30 Reinforced Concrete Knee Wall Details

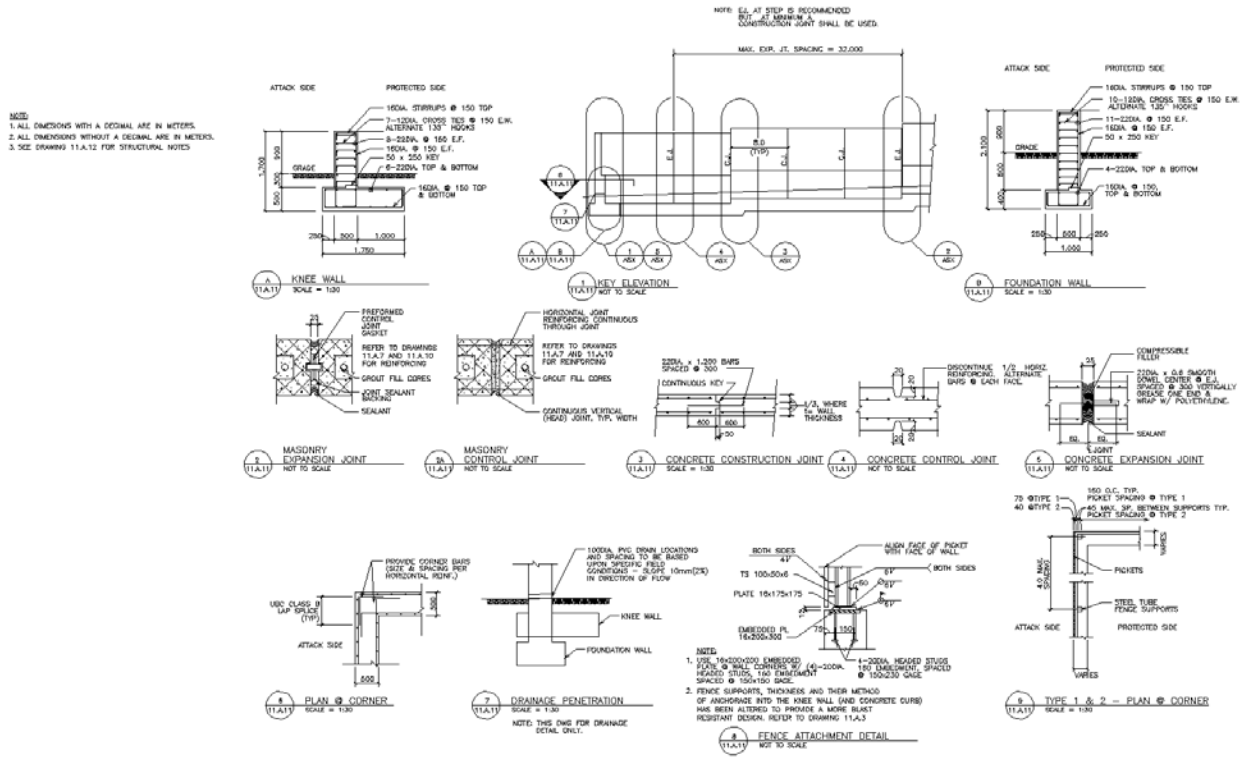

6-2.11.2 **Testing**.

Reinforced concrete knee walls have been formally tested. A configuration similar to Figure 6-28 was tested with a 15,000-lb (6,818-kg) vehicle traveling at 50 mph (80 kph). The wall effectively stopped the attack vehicle within 3.28 ft (1 m).

6-2.12 **Plastic Barrier Systems**.

6-2.12.1 **Description**.

Plastic barrier systems (Figure 6-31) are available from several manufacturers listed in Appendix A. They are molded in a configuration similar to the Jersey Bounce or Barrier, shown in Figure 6-15. These barriers weigh approximately 130 lbs empty and 1,600 to 1,800 lbs when filled with water. The units are made from polyethylene plastic and come in six-ft sections that are easily transported. An interlocking section and steel pipe are used to link the sections together. Linking the sections is strongly recommended to provide added resistance to vehicle impact and reduce lateral movement. Surface mounting of these units limits their use as effective vehicle barriers, except for low-speed impacts (less than 15 mph) and angles less than 25 degrees.

6-2.12.2 **Testing**.

Example plastic barriers, filled with sand, have been crash tested, as described in Appendix E, paragraph E-3.

Figure 6-31 Commercially Available Plastic Barrier System

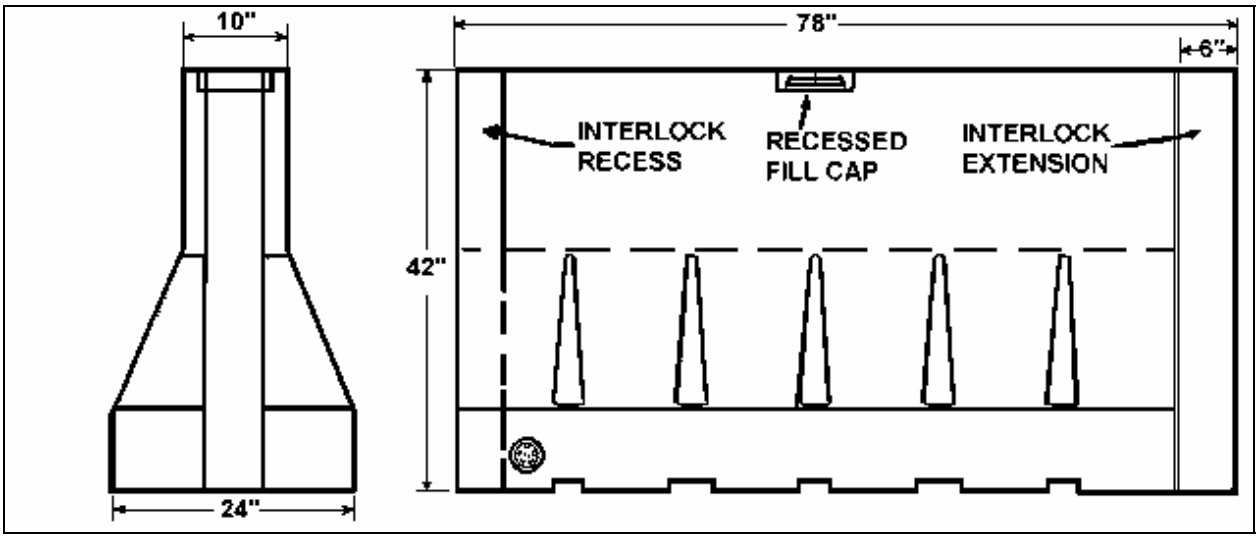

6-2.13 **Expedient Barrier Systems**.

When barrier systems are required quickly with no time for ordering manufactured barriers, common construction items or available construction vehicles can be used as barriers. Materials such as large-diameter concrete and steel pipes can form makeshift barriers. Even large construction vehicles (e.g., dump trucks and earth moving equipment) that have heavy mass and size can be used, or modified for use, as expedient barrier systems. Some examples are:

a. Three-ft (0.9-m) sections of large-diameter, corrugated metal or reinforced concrete pipe can be placed on end and filled with sand or earth.

b. Steel pipe can be stacked and welded together in a pyramid.

c. Construction vehicles can be anchored together with cable or chain.

These expedient measures can provide effective protection against vehicle ramming attacks. Because no testing has been done on these systems, it is important that these barriers be stabilized and anchored to prevent displacement by a threat vehicle.

6-3 **VEHICLE BARRIER PERFORMANCE**.

Full-scale testing of vehicle barrier systems is only one way to obtain information on the performance capabilities of vehicle barriers. Testing provides evidence that the selected barrier will effectively absorb the impact of a threat vehicle. Tests may be conducted by independent testing laboratories, government agencies, or the manufacturer. Some tests are properly documented and/or witnessed by authorities, while others are not. Only tests conducted by independent laboratories or government agencies should be accepted.

It is important to correctly interpret the test results. For example, “full penetration” could mean that the vehicle passed through a barrier and was still capable of movement after

penetration. Or, it could mean the vehicle payload penetrated through a barricade, but the vehicle was incapacitated. Whenever possible, carefully review the actual test report before selecting a barrier system. For commercially-available active barriers, these reports are usually accessible from the manufacturer. Such review may not always be possible

Selection of vehicle barriers can also be based on engineering analysis. Finite element analysis and computer models specifically designed to analyze barrier impact, such as the Barrier Impact Response Model 3 Dimension, have been successfully used and correlated to actual test results. Using this method is much more cost-effective than full-scale testing. Before accepting the results of an engineering analysis from a manufacturer, have the calculations carefully checked by a qualified structural engineer.

APPENDIX A REFERENCES

AASHTO Guide for Selecting, Locating and Designing Traffic Barriers.

Army Regulation (AR) 190-13, *Army Physical Security Program.*

Construction Criteria Base (CCB) system maintained by the National Institute of Building Sciences at Internet site http://www.ccb.org.

DOD 2000.12 *DOD Antiterrorism (AT) Program*.

DOD 2000.16 *DOD Antiterrorism Standards.*

DOD 5200.8-R *Physical Security Program.*

MCO P5530.14A *Marine Corps Physical Security Program Manual.*

Means, R.S., "Building Construction Cost Data", 61st Edition, 2003, http://www.rsmeans.com.

Whole Building Design Guide web site http://www.wbdg.org/ccb

NAVFAC P397/TM-5-1300/AF4 88-22, Structures to Resist the Effects of Accidental Explosions.

PDC-TR90-2, *BIRM 3D – Barrier Impact Response Model 3 Dimension.*

SD-STD-02.1, *Specification for Vehicle Crash Test of Perimeter Barriers and Gates*.

UFC 4-010-01, *DoD Minimum Antiterrorism Standards for Buildings*, Tri-Service Engineering Senior Executive Panel, http://dod.wbdg.org/

UFC 4-010-02, *DoD Minimum Antiterrorism Standoff Distances for Buildings*, Tri-Service Engineering Senior Executive Panel, http://dod.wbdg.org/

UFC 4-020-01, *Security Engineering Facilities Planning Manual*, Tri-Service Engineering Senior Executive Panel, http://dod.wbdg.org/

UFC 4-020-02, *Security Engineering Facilities Design Manual*, Tri-Service Engineering Senior Executive Panel, http://dod.wbdg.org/

UFC 4-022-01, *Security Engineering: Entry Control Facilities/Access Control Points*, Tri-Service Engineering Senior Executive Panel, http://dod.wbdg.org/

UFC 4-022-01, *Security Engineering: Fences, Gates and Guard Facilities*, Tri-Service Engineering Senior Executive Panel, http://dod.wbdg.org/

UFGS 34 17 13.19 , *Unified Facilities Guide Specification, Active Vehicle Barriers*.

UFGS 12 93 00, *Unified Facilities Guide Specification, Site Furnishings*.

UG-2031-SHR *User's Guide: Protection Against Terrorist Vehicle Bombs.*

United States Air Force (USAF) *Vehicle Bomb Mitigation Guide.*

APPENDIX B LIST OF MANUFACTURERS

B-1 SCOPE.

This appendix lists manufacturers of active and passive vehicle barriers. The information contained herein is intended for informational purposes only. Barrier systems used must be listed in either the Department of State (DoS) certified or Department of Defense (DoD) approved anti-ram vehicle barrier lists. Barrier widths shall be 'as certified/approved' on these lists. Alternatively, if a barrier system's width is between the widths of two listed barrier systems that are identical except for their widths, then that barrier system is also acceptable. Exceptions and acceptable widths will only be taken from the DoD anti-ram vehicle barrier list. The design and structural materials of the vehicle barrier furnished shall be the same as those used in the crash tested barrier. Crash test must have be performed and data compiled by an approved independent testing agency in accordance with either ASTM F 2656 or SD-STD-02.01. Barriers tested and certified on the previous Department of State standard, SD-STD-02.01, April 1985, and listed on the DoD approved anti-ram vehicle barrier list are also acceptable.

B-2 DEFINITIONS.

The definitions in Chapter 3 of this UFC apply to this appendix.

B-3 MANUFACTURERS OF ACTIVE BARRIERS.

The manufacturers listed in this appendix produce barriers meeting the certification criteria of SD-STD-02-01, Revision A, dated March 2003. This list is not intended to be a recommendation or an endorsement of any product or company. See United States Army Corps of Engineers (USACE), Protective Design Center, Omaha District (https://pdc.usace.army.mil/library/BarrierCertification) for latest versions of DoS and DoD certified anti-ram vehicle barriers.

B-4 COST.

Costs for barriers are presented in Appendix B. Specific manufacturers listed in this appendix should be contacted to obtain current costs for a particular barrier system.

Table B-1. DoS CERTIFIED ANTI-RAM VEHICLE BARRIERS

October 03, 2006

See United States Army Corps of Engineers (USACE), Protective Design Center, Omaha District (https://pdc.usace.army.mil/library/BarrierCertification) for latest versions of DoS and DoD certified anti-ram vehicle barriers.

(The following barriers meet the certification criteria of SD-STD-02-01, Revision A, dated March 2003)

Manufacturer/ Designer/Distributor	Ref. #	Barrier Model	Pass Rating*
Ameristar Fence Products 1555 N. Mingo Road Tulsa, OK 74116 (866) 467-2773 Tel (877) 926-3747 Fax www.ameristarfence.com	**1** **2**	**Impasse Perimeter Security Fence** (fence w 2/1" cable w/bollard anchorage) **Impasse Perimeter Security Fence Type A** (fence w2 /1" cable w/bollard anchorage w/o anti-climb feature) **Impasse Perimeter Security Fence** (fence w 2/1" cables with bollard anchorage	**K8** **K8** **K12**
Atlas Security Products, Inc. P.O. Box 59423, Rockville, MD 20859 Phone: (866) 472-8527 Toll Free: (866) 472-8527 Fax: (240) 238-2814 http://www.atlasspi.com		**ASPI-0706** (shallow bollard system	**K4**
Autogate, Inc. 7306 Driver Road, Berlin Heights, OH 44814 Phone: (800) 944-4283 Toll Free: (800) 944-4283 Fax: (419) 588-3514		**VPL-CB-24** (anti-ram drop arm)	**K8**
Automatic Systems America, Inc. 8 Haven Avenue, Suite 205, Port Washington, NY 11050 Phone: (516) 944-9498 Fax: (516) 767-3446 http://www.automaticsystems.com/		**RSB 78** (surface mounted hydraulic wedge without buttresses	**K12**
Barrier1 Systems, Inc. 818 Northen Shores Point, Greensboro, NC 27455 Phone: (336) 362-1980 Fax: (336) 288- http://www.barrier1.us/		**Barrier1** (Road closure system; 60 foot net based barrier)	**K12**

B&B ARMR Corp. 9063 Jerry's Circle Manassas, VA 20110 (703) 335-6006 Tel (703) 335-8822 Fax http://www.bb-armr.com	**3** **4** **5** **6** **7** **8**	**Model 400** (sliding gate) **Model 400A** (sliding gate w/o anti-climb feature) **Model 450** (sliding gate) **Model 450A** (sliding gate w/o anti-climb feature) **Model 730** (hydraulic drop bar) **Model 820** (hydraulic shallow mount plate) **Model 850** (Portable vehicle barrier)	**K4** **K4** **K12** **K12** **K4** **K12** **K4**
Corrugated Metals, Inc. 4800 South Hoyne Ave. Chicago, IL 60609 (312) 254-1611 Tel (312) 254-1106 Fax http://www.corrugated-metals.com	**9**	**Metalith Perimeter Security Wall** (sand filled wall)	**K12**[3]
Creative Building Products 6409 Highview Drive Fort Wayne, IN 46818-1385 (260) 432-7158 Tel (260) 459-0929 Fax http://www.soacorp.com	**10**	**Model 32503** (manual security gate) **CBP05001** (Perimeter Wall- sand filled)	**K12**[1] **K12**

***** Rating determined from perpendicular barrier impact results of 15,000lb (6810kg) vehicle.

Pass = Maximum penetration of the cargo bed is 1 meter or less.
K = Maximum barrier impact speed rating.
K12 = 50 mph (80 kph)
K8 = 40 mph (65 kph)
K4 = 30 mph (48 kph)

Notes:

[1] Certified as a manual barrier only
[2] Certified as a fixed barrier only
[3] Passive barrier

Special Note: Certification of the above barriers applies to crash performance only - not its operational suitability.

DS and OBO are not liable for improper installation of the equipment.

Manufacturer/ Designer/Distributor	Ref. #	Barrier Model	Pass Rating*
Delta Scientific Corp. 24901 West Ave. Stanford Valencia, CA 91355 (661) 257-1800 Tel (661) 257-0617 Fax www.deltascientific.com	**11** **12** **13** **14** **15** **16** **17** **18** **19** **20**	**TT207S** (hydraulic wedge) **TT207S/FM** (surface-mounted hydraulic wedge) **TT280** (sliding gate) **DSC501** (surface-mounted hydraulic wedge w/o buttresses) **DSC701** (retractable bollards) **DSC720** (retractable bollards) **DSC800** (retractable bollards) **DSC701FP** (fixed bollards) **DSC720FP** (fixed bollards) **DSC800FP** (fixed bollards) **DSC2000** (surface-mounted hydraulic wedge w/o buttresses) **DSC7000** (drop arm w/manual/hydraulic capability **MP5000** (mobile/portable barrier)	**K12** **K12** **K12** **K12** **K8** **K12** **K4** **K8**[2] **K12**[2] **K4**[2] **K12** **K12** **K4**
Department of State Bureau of Diplomatic Security Physical Security Division SA-14 10th Floor Washington, DC 20522-1403	**21** **22** **23** **24** **25** **26** **27** **28** **29**	**DS-1** (concrete-filled steel bollards w/ connecting channel) **DS-6** (anti-ram knee wall) **DS-7** (anti-ram foundation wall) **DS-9** (reinforced concrete planter) **DS-10** (pedestrian passage concrete-filled steel bollards in groups of three) **DS-22** (concrete-filled steel bollards without channel) **DS-22R** (removable concrete-filled steel bollards) **DS-30** (10" thick reinforced concrete wall) **DS-40** (anti-ram/anti-climb fence) **DS-50** (1 meter anti-ram knee wall)	**K12**[3] **K12**[3] **K4**[3] **K12**[3] **K12**[3] **K12**[3] **K12**[3] **K12**[3] **K12**[3] **K12** **K12**
Eagle Security Group International, Inc. 4001 Carmichael Center, Suite 240, Montgomery, AL 36106 Phone: (334) 279-1557 Toll Free: Fax: (334) 279-4959 http://www.eaglesecgrp.com/		**Eagle Series Bollards** (retractable bollards) **Eagle Series Wedge Barrier** (shallow mount hydraulic wedge)	**K8** **K12**
Energy Absorption Systems, Inc 3617 Cincinnati Avenue, Rocklin, CA 95765 Phone: (916) 645-8181 Fax: (916) 645-3495 http://www.energyabsorption.com/index.htm		**StopGate Barrier Arm** (32 foot barrier arm)	**K4**
Heintzmann Security Systems Bessemerst. 80, D-44793 Bochum, Germany +(492) 349-1440		**VSH 610** (hydraulic rising beam)	**K12**
HESCO Bastion, LTC		**C4315** (two deep bottom tier with two deep top	**K12**

37 Knowsthorpe Gate, Cross Green Ind. Estate, Leeds LS9 0NP, UK Phone: +44 11(3 2) 48 -6633 Toll Free: Fax: +44 11(3 2) 48 -3501		tier; 3 foot by 4 foot open-topped sand filled cube) **Mil 3** (two deep bottom tier with a single top tier of open-topped sand filled cubes) **C3315** (two deep bottom tier with two deep top tier; 3 foot by 3 foot open-topped sand filled cube) **Mil 1** (two deep bottom tier with a single top tier of open-topped sand filled cubes)	 **K12** **K12** **K12**
Intertex Barriers, Inc. 25103 Rye Canyon Loop Valencia, CA 91355 (661) 295-0339 Tel (661) 295-3235 Fax http://www.boonedam.nl/inc/securityaccess/vehiclebarriers.asp	**30** **31** **32** **33** **34**	**Stinger** (shallow mount) **Magnum** (hydraulic wedge) **Mini-Magnum** (narrow blade) **De-fender** (retractable bollards) **Patriot** (hydraulic rising beam) **Titan** (fixed bollard)	**K12** **K12** **K8** **K4** **K12** **K12**
Merchants Metals 3838 N. Sam Houston Parkway E, Suite 600, Houston, TX 77032 Phone: (281) 372-3800 Toll Free: (866) 888-5611 Fax: (281) 372-3801 http://www.merchantsmetals.com/default.asp		**Merchant Metals High Security Fence System** (cable fence system)	**K8**
Nasatka Barrier, Inc. 7702-B Old Alexandria Ferry Road Clinton, MD 20735 (301) 868-0301 Tel (301) 868-0524 Fax http://www.nasatka.com	**35** **36** **37** **38** **39** **40** **41**	**NMSB II** (surface-mounted hydraulic wedge) **NMSB IIIb** (surface-mounted hydraulic wedge) **NMSB IIId** (surface-mounted hydraulic wedge w/o buttresses) **NMSB IV** (hydraulic wedge) **NMSB V** (hydraulic wedge) **NMSB XII** (hydraulic drop bar) **NMSB VI** (retractable bollards) **NMSB XX** (sliding gate)	**K12** **K12** **K12** **K12** **K12** **K12** **K12** **K12**

***** Rating determined from perpendicular barrier impact results of 15,000lb (6810kg) vehicle.

Pass = Maximum penetration of the cargo bed is 1 meter or less.
K = Maximum barrier impact speed rating.
K12 = 50 mph (80 kph)
K8 = 40 mph (65 kph)
K4 = 30 mph (48 kph)

Notes:

[1] Certified as a manual barrier only
[2] Certified as a fixed barrier only
[3] Passive barrier

Special Note: Certification of the above barriers applies to crash performance only - not its operational suitability.

DS and OBO are not liable for improper installation of the equipment.

Manufacturer/ Designer/Distributor	Ref. #	Barrier Model	Pass Rating*
National Intelligent Traffic Systems 5131 Post Road, Suite 300 Dublin, OH 43017 (614) 526-3231 Tel (614) 526-3227 Fax http://www.nationalits.com	**42**	**NITS Model 400** (retractable bollards)	**K12**
Norshield Security Products 3224 Mobile Highway Montgomery, AL 36108 (334) 286-4348 Tel (334) 286-4399 Fax http://www.norshieldsecurity.com	**43** **44** **45**	**WBHS916 (NOR 82)**(shallow mount hydraulic wedge) **SGHS1209 (NOR 40)** (sliding gate) **CBHS1230 (NSS30)** (fixed bollards)	**K12** **K4** **K4**
Perimeter Defense Technologies, LP 4315 SCR 1290 Odessa, TX 79765 (432) 561-8006 Tel (432) 561-8031 Fax	**47** **48**	**DRT K-12** (set of six retractable bollards) **PDT1200** (set of three retractable bollards)	**K12** **K12**
Performance Development Corporation 109 Jefferson Ave., Oak Ridge, TN 37830 Phone: (865) 481-2280 Fax: (865) 425-1249 http://www.pdcproducts.com/fixedinvert.html		**VSB-F10** (hydraulic wedge)	**K12**
PRO Barrier Engineering LLC 228 Grandview Drive, Hummelstown, PA 17036 Phone: (717) 566-9347 Fax: (717) 566-9309 http://www.probarrier.com/		**Permanent Arrestor** (surface-mounted hydraulic gate arm)	**K12**
Robotic Security Systems, Inc. 6530 Hwy. 22 Panama City, FL 32404 (866) 249-1029 Tel (850) 874-2189 Fax http://roboticsecuritysystems.com	**49**	**RSS-2000** (electric wedge barrier)	**K12**
RSA Protective Technologies, LLC 1573 Mimosa Court, Upland, CA 91784 Phone: (909) 946-0964 Toll Free: Fax: (909) 946-1186 http://www.rsaprotect.com/		**Anti-Ram Bollard System** (anti-ram bollard system with 5 inch footing) **Foundation Bollard Pad** (14 inch depth fixed bollards) **Anti-Ram Bollard System** (anti-ram bollard system with 8 inch footing)	**K4/K8** **K4** **K8**
Sälzer Building Security Dietrich Bonhoeffer Str 1-3 D 35037 Marburg, Germany 49 (0) 6421 / 938 100 Tel 49 (0) 6421 / 938 190 Fax http://www.saelzer.de	**50**	**Model 730** (hydraulic drop bar)	**K4**
Secure Site Design LLC (Victor Stanley		**Model K4** (fixed bollards)	**K4**

Inc) P.O. Box 60910, Potomac, MD 20859 Phone: (410) 286-3375 Toll Free: (800) 268-4726 Fax: (410) 479-0175 http://www.securesitedesign.com/			
Secure USA, Incorporated 4250 Keith Bridge Road, Suite 160, Cumming, GA 30041 Phone: (770) 205-0789 Toll Free: (888) 222-4559 Fax: (770) 889-7939 http://www.secureusa.net/		**Shallow Mount Bollard System** (shallow-mounted bollard system)	**K4**

***** Rating determined from perpendicular barrier impact results of 15,000lb (6810kg) vehicle.

Pass = Maximum penetration of the cargo bed is 1 meter or less.
K = Maximum barrier impact speed rating.
K12 = 50 mph (80 kph)
K8 = 40 mph (65 kph)
K4 = 30 mph (48 kph)

Notes:

[1] Certified as a manual barrier only
[2] Certified as a fixed barrier only
[3] Passive barrier

Special Note: Certification of the above barriers applies to crash performance only - not its operational suitability.

DS and OBO are not liable for improper installation of the equipment.

Manufacturer/ Designer/Distributor	Ref. #	Barrier Model	Pass Rating*
Tymetal Corp. 2566 State Route 40 Greenwich, NY 12834 (800) 328-4283 Tel (518) 692-9404 Fax http://www.tymetal.com	**51**	**FIGS** (sliding gate)	**K4**
Universal Safety Response, Inc. 350 Fifth Ave. Suite 315 New York, NY 10118 (914) 224-5279 Tel (770) 917-9205 Fax http://usrgrab.com	**52** **53** **54**	**GRAB K8 Single Lane** (road closure system) **GRAB K8 36-ft Lane** (road closure system) **GRAB K12 36-ft Lane** (road closure system)	**K8** **K8** **K12**
U.S. Koei Technologies, Inc. 25506 Crenshaw Blvd. Torrance, CA 90505 (310) 326-4053 Tel (310) 326-4098 Fax	**55**	**Hard Post EP-354A** (set of four retractable bollards) **Hard Post EP-354A/ST 700** (retractable bollards) **Hard Post EP-354A/ST 650** (retractable bollards)	**K12** **K8** **K4**
Vanguard Protective Technologies (Bosik Technologies Limited) 2495 Delzotto Ave. Ottawa, Ontario Canada, K1T 3V6 (613) 822-8898 Tel (613) 822-3672 Fax http://www.vanguardresponse.com http://www.bosik.com	**56** **57**	**Bosik Bar VBS** (deep foundation crash beam) **Bosik Bar VBS** (shallow foundation crash beam)	**K12** **K4**
Sampson Security Group **Bavak USA** 25241 Del Rio Laguna Niguel, CA 92677 (949) 388-0669 Tel (949) 388-0669 Fax http://www.sampsonsecurity.com	**58**	**Bavak Roadblocker** (wedge barrier)	**K8**

***** Rating determined from perpendicular barrier impact results of 15,000lb (6810kg) vehicle.
Pass = Maximum penetration of the cargo bed is 1 meter or less.
K = Maximum barrier impact speed rating.
K12 = 50 mph (80 kph)
K8 = 40 mph (65 kph)
K4 = 30 mph (48 kph)

Notes:
[1] Certified as a manual barrier only
[2] Certified as a fixed barrier only
[3] Passive barrier

Special Note: Certification of the above barriers applies to crash performance only - not its operational suitability.

DS and OBO are not liable for improper installation of the equipment.

B-6 MANUFACTURERS OF PASSIVE BARRIERS.

This manufacturers list for passive barrier systems is not intended to be a recommendation or an endorsement of any product or company.

Ameristar Fence Products
1555 N. Mingo Rd.
Tulsa, OK 74116
Office: (866) 467-2773
FAX: (918) 879-6001
http://www.ameristarfence.com

Cal Pipe
1000 E. Chicago Ave.
East Chicago, IN 46312
Office: (800) 536-2248
FAX: (219) 397-6233
http://www.calpipe.com

Creative Building Products
Div. Of Spirit of America Corp
6409 Highview Drive
Fort Wayne, IN 46818
Office: (800) 860-2855
http://www.soacorp.com

Delta Scientific Corporation
24901 West Avenue Stanford
Valencia, CA 91355
Office: (661) 257-1800
FAX: (661) 257-0617
www.deltascientific.com

Energy Absorption Systems, Inc.
35 East Wacker Drive
Chicago, IL 60601-2076
Office: (317) 467-6750
FAX: (317) 467-1356
http://www.energyabsorption.com

Guardian
77 East Market Street
Wilkes-Barre, PA 18701-3116
Office: (717) 824-0799
FAX: (717) 824-0899

Maccaferri Gabions Inc.
10303 Governor Land Blvd.

Williamsport, MD 21795
Office: (888) 222-4559
http://www.maccaferri-usa.com

Roadtech Manufacturing
7115 West North Ave.
Oak Park, IL 60302
Office: (800) 880-3073
FAX: (773) 866-1698
http://www.roadtech.com

Rose Enterprises, Inc.
One Greentree Centre, Suite 201
Marlton, New Jersey 08053
Office: (609) 988-5454

RSA Protective Technologies, LLC
1573 Mimosa Court
Upland, CA 91784
Office: (909) 946 0964
FAX: (909) 946 1186

Secure USA
5784 Hopewell Road
Cumming, GA 30040
Office: (877) 653-8814
http://www.secureusa.net

Trinity Industries
2525 N. Stemmons Freeway
Dallas, TX 75207
Office: (800) 414-5024
http://www.trin.net

US Reflector
144 Canterbury Street
Worcester, MA 01603-2846
Office: (800) 414-5024
http://www.usreflector.com

APPENDIX C COST DATA

C-1 SCOPE.

This appendix presents rating and cost data for commercial vehicle barriers, and cost data for passive barriers. The information contained herein is intended for informational purposes only.

C-2 NON-GOVERNMENT PUBLICATIONS.

Means, R.S., "Building Construction Cost Data", 65th Edition, 2007.

C-3 DEFINITIONS.

The definitions in Chapter 3 of this UFC apply to this appendix.

C-4 ACTIVE BARRIERS.

C-4.1 DoS Ratings for Active Barriers.

The commercial active barriers, shown in

Table B-1, have been formally tested and certified by DoS. The DoS list of June 20, 2003 includes the barriers accepted by DoD. The ratings are explained in Table C-2.

Table C-2 DoS Ratings*

DoS Rating	Speed of Vehicle At Impact in mph (kph)	Kinetic Energy	Max. Allowable Penetration of Vehicle
K12	50 mph (81 kph)	1,250,000 ft-lbf (178,812 kgf-m)	
K8	40 mph (64 kph)	800,000 ft-lbf (110,600 kgf-m)	
K4	30 mph (48 kph)	450,000 ft-lbf (62,212 kgf-m)	
L3			3 ft (0.91 m)
L2			3 to 20 ft (0.91 to 6.1 m)
L1			20 to 50 ft (6.1 to 15.2 m)

* Based on 15,000-lb (6,818-kg) vehicle weight

C-4.2 Cost Data for Active Barriers.

Table C-3 contains cost data for active vehicle barriers certified in the DoS Certified Anti-Ram Vehicle Barriers list dated June 20, 2003. Refer to

Table B-1 for barrier system reference number identification. The latest DoS SD-STD-02.01, Revision A, dated March 2003 (included in

Table B-1) has the same K ratings, but penetration is limited to 3.28 ft (1 m).

Table C-3 Manufacturer's Data and Cost for Certified Active Barriers

Characteristics / **Barrier System Ref #**	Barrier Type (Active, Fixed, Portable, Barricade, Bollard, Gate)	Equipment Cost* ($x1,000)	Installation Cost (% of Equip. Cost)	Width (ft)	Height (in.)	Operating Cycle (sec)	Emergency Cycle (sec)
3	Active, Fixed, Gate	***	***	12	108	10 to 15	7 to 10
4	Active, Fixed, Gate	***	***	12	108	10 to 15	7 to 10
5	Active, Fixed, Gate	***	***	12	108	10 to 15	7 to 10
6	Active, Fixed, Gate	***	***	12	108	10 to 15	7 to 10
7	Active, Fixed, Gate	*#	*#	*#	*#	*#	*#
8	Active, Fixed, Barrier	***	***	12	108	10 to 15	7 to 10
11	Active, Fixed, Barricade	35 to 45	125	12 to 20	36	2 to 15	1
12	Active, Fixed, Barricade	35 to 45	125	12 to 20	39	4 to 5	1
13	Active, Fixed, Gate	35 to 45	125	12	108	27 to 48 FPM	
14	Active, Fixed, Barricade	35 to 45	125	9 to 20	39	3 to 15	2
15	Active, Bollard	27 to 37	125	1.06 dia.	39	3 to 15	1.5
16	Active, Bollard	29 to 39	118	1.06 dia.	35	3 to 15	1.5
17	Active, Bollard	25 to 35	133	0.55 dia.	30	3 to 15	1.5
Characteristics	Barrier Type (Active, Fixed, Portable,	Equipment Cost* ($x1,000)	Installation Cost (% of Equip. Cost)	Width (ft)	Height (in.)	Operating Cycle (sec)	Emergency Cycle (sec)

Barrier System Ref #	Barricade, Bollard, Gate)						
30	Active, Fixed, Barricade	20 to 40	70	8 to 12	44	4 to 6	1
31	Active, Fixed, Barricade	20 to 40	75	8 to 12	32	4 to 6	1
32	Active, Fixed, Barricade	***	***				
33	Active, Bollard	15 to 20	75	8 to 10	30	4 to 6	1
34	Active, Fixed, Barricade	***	***				
35	Active, Fixed, Barricade	13	60	14	31	3	1
36	Active, Fixed, Barricade	24	35	14	33	3	1
37	Active, Fixed, Barricade	***	***	8 to 12	33	5	2
38	Active, Fixed, Barricade	18	60	14	31	3	1
39	Active, Fixed, Barricade	18	60	14	31	3	1
40	Active, Fixed, Barricade	***	***	16 to 20	32	12	
41	Active, Bollard	***	***	12 to 16 (3 bollards)			
42	Active, Fixed, Bollard	43.2	50-75	12 to 16 (3 bollards)			
43	Active, Fixed, Barricade	***	***	9		3	
44	Active, Fixed, Gate	***	***	12	108		
45	Active, Fixed, Barricade	**	**	19			
Characteristics	Barrier Type (Active, Fixed, Portable, Barricade,	Equipment Cost* ($x1,000)	Installation Cost (% of Equip. Cost)	Width (ft)	Height (in.)	Operating Cycle (sec)	Emergency Cycle (sec)

Barrier System Ref #							
	Bollard, Gate)						
46	Active, Fixed, Barricade	***	***			5	1
47	Active, Fixed, Bollard	**	**	12	30		
48	Active, Fixed, Bollard	37.5	23	12	30		
49	Active, Fixed, Bollard	46	33	12	36	2.5	1
50	Active, Fixed, Barricade	22.7	40	12 to 15	39	3	
51	Active, Fixed, Gate	***	***	12 to 24	96	2 to 60	
52	Active, Fixed, Barricade	47.9	Included in cost	8 to 20	55-58	2	1.5
53	Active, Fixed, Barricade	59.4	Included in cost	36	55-58	2	1.5
54	Active, Fixed, Barricade	95.5	Included in cost	36	55-58	2	1.5
55	Active, Fixed, Bollard	~100 ***	20 to 30				
56	Active, Fixed, Barricade	***	***	25	24 to 30	3 to 5	1
57	Active, Fixed, Barricade	***	***	25	24 to 30	3 to 5	1
58	Active, Fixed Barricade	***	***			2 to 4	

* Cost figures are estimates from manufacturers
** Barrier is not currently in production. Contact manufacturer for this cost.
*** Contact manufacturer for this cost.
*# Barrier is being redesigned by manufacturer. No data currently available.

C-5 COST DATA FOR PASSIVE BARRIERS.

Table C-4 is a summary of cost data for selected passive vehicle barriers.

Table C-4 Cost for Passive Barriers

Barrier	Cost/Unit**
Anchored concrete Jersey barrier, non-reinforced (2007 Means double face, precast concrete median barrier; 34 71 13.26.2200)	$65/ft ($213.25/m)
Buried tires, 36-ply, 8-ft (2.4-m) diameter, weighing 2,000 lb (909 kg) each	$25.00/tire
Eight-in. (20.3-cm) diameter bollard system @ 3 ft (0.9 m) on center with 12-in. (30.5-cm) channel rail (2007 Means 8-in (0.2-m) bollard 34 71 13.17.2700, corrugated steel rail, 3 ft (0.9 m), 34 71 13.260012.)	$629/each
Standard chain link fence [7 ft (2.1 m), 9 ga w/ outrigger] and two 3/4-in. (1.9-cm) diameter cables (2007 Means 7-ft (2.1-m) chain link 32 31 13.53.0100 with cable guide rail assuming a ¾-in. (1.9-cm) cable 34 71 13.26.0600)	$61.30/ft ($201/m) (including fence)
Eight-in. (20.3-cm) diameter concrete-filled pipe (2007 Means 8-in. concrete-filled pipe bollards 34 71 13.17.2700)	$515.00/each
Concrete planter barrier (2007 Means for 48-in. (1.2-m) dia., 3-ft (0.9-m) high 34 71 13.17.0200)	$955/each
Cable barrier (2007 Means 34 71 13.26.0600 guide rail with steel posts; wire rope [6x19] adjusted per 05 15 16.50.0830 series rope costs)	
One cable @ 3/4-in. (1.9-cm) dia.	$12.90/ft ($42.32/m)
Two cables @ 3/4-in. (1.9-cm) dia.	$16.95/ft ($55.61/m)
Three cables @ 3/4-in. (1.9-cm) dia.	$21.05/ft ($69.06/m)
Four cables @ 3/4-in. (1.9-cm) dia.	$25.10/ft ($82.35/m)
One cable @ 1-in. (2.5-cm) dia.	$18.50/ft ($60.70/m)
Two cables @ 1-in. (2.5-cm) dia.	$26.75/ft ($87.76/m)
Three cables @ 1-in. (2.5-cm) dia.	$34.00/ft ($111.55/m)
Four cables @ 1-in. (2.5-cm) dia.	$43.25/ft ($141.90/m)
Reinforced concrete retaining or knee wall [2007 Means 03 30 53.40.6200 for cast-in-place concrete retaining walls, 4-ft (1.2-m) high]	$340/cu. yd ($445/cu. m)

** Based on "Building Construction Cost Data, 65th Annual Edition, 2007." Average cost for continental United States. All costs including overhead and profit.

APPENDIX D PERFORMANCE DATA FOR ACTIVE AND PASSIVE VEHICLE BARRIERS

D-1 SCOPE.

This appendix presents performance data for commercial vehicle barriers and passive barriers. The information contained herein is intended for guidance only.

D-2 DEFINITIONS.

The definitions in Chapter 3 of this handbook apply to this appendix.

D-3 ACTIVE BARRIERS.

The commercial active barriers shown in Table D-5 have been formally tested.

Table D-5 Performance for Active Barriers

Barrier System Reference #	Model (Refer to Table B-1 for descriptions)	Kinetic Energy ft-lbf (kgf-m) x 1,000,000	Penetration ft (m)
3	Model 400	0.45 (0.06)	3 (0.9)
4	Model 400A	0.45 (0.06)	3 (0.9)
5	Model 450	1.2 (0.16)	3 (0.9)
6	Model 450A	1.2 (0.16)	3 (0.9)
7	Model 730	0.45 (0.06)	3 (0.9)
8	Model 820	1.2 (0.16)	3 (0.9)
11	TT207S	1.2 (0.16)	3 (0.9)
12	TT207S/FM	1.2 (0.16)	3 (0.9)
13	TT280	1.2 (0.16)	3 (0.9)
14	DSC501	1.2 (0.16)	3 (0.9)
15	DSC701	0.8 (0.11)	3 (0.9)
16	DSC720	1.2 (0.16)	3 (0.9)
17	DSC800	0.45 (0.06)	3 (0.9)
30	Stinger	1.2 (0.16)	3 (0.9)
31	Magnum	1.2 (0.16)	3 (0.9)
32	Mini-Magnum	0.8 (0.11)	3 (0.9)
33	De-fender	0.45 (0.06)	10.5 (3)
34	Patriot	1.2 (0.16)	3 (0.9)
35	NMSB II	1.2 (0.16)	3 (0.9)
36	NMSB IIIb	1.2 (0.16)	3 (0.9)
37	NMSB IIId	1.2 (0.16)	3 (0.9)
38	NMSB IV	1.2 (0.16)	3 (0.9)
39	NMSB V	1.2 (0.16)	3 (0.9)
40	NMSB XII	1.2 (0.16)	3 (0.9)
41	NMSB NBI	1.2 (0.16)	3 (0.9)
42	NITS Model 400	1.2 (0.16)	3 (0.9)
43	WBHS916	1.2 (0.16)	3 (0.9)
44	SGHS1209	0.45 (0.06)	3 (0.9)
45	CBHS1230	0.45 (0.06)	3 (0.9)
46	VSB-F10	1.2 (0.16)	3 (0.9)
47	DRT K-12	1.2 (0.16)	3 (0.9)
48	PDT1200	1.2 (0.16)	3 (0.9)
49	RSS-2000	1.2 (0.16)	3 (0.9)
50	Model 730	0.45 (0.06)	3 (0.9)
51	FIGS	0.45 (0.06)	3 (0.9)
52	GRAB K8 Single Lane	0.8 (0.11)	3 (0.9)

Barrier System Reference #	Model (Refer to Table B-1 for descriptions)	Kinetic Energy ft-lbf (kgf-m) x 1,000,000	Penetration ft (m)
53	GRAB K8 36-ft Lane	0.8 (0.11)	3 (0.9)
54	GRAB K12 36-ft Lane	1.2 (0.16)	3 (0.9)
55	Hard Post EP-354A	1.2 (0.16)	3 (0.9)
56	Bosik Bar VBS, deep	1.2 (0.16)	3 (0.9)
57	Bosik Bar VBS, shallow	0.45 (0.06)	3 (0.9)
58	Bavak Roadblocker	0.8 (0.11)	3 (0.9)

D-4 **PASSIVE BARRIERS**.

Table D-6 is a summary of performance data for selected passive barriers.

Table D-6 Performance for Passive Barriers

Barrier	Kinetic Energy ft-lbf (kgf-m) x 1,000,000	Penetration ft (m)
Anchored concrete Jersey barrier, non-reinforced	0.3 (0.04)	20 (6.1)
Buried tires, 36-ply, 8-ft (2.4-m) diameter, weighing 2,000 lb (909 kg) each	0.3 (0.04)	1 (3.05)
Eight-in. (20.3-cm) diameter bollard system @ 3 ft (0.9 m) on center with 12-in. (30.5-cm) channel rail	1.1 (0.15)	None
12.75-in. (32.4-cm) to 13.25-in. (33.7-cm) diameter bollard system @ 3 ft (0.9 m) on center	0.8 (0.11) 1.2 (0.17)	3 (0.9) 3 (0.9)
Standard chain link fence [7 ft (2.1 m), 9 ga w/ outrigger] and one 3/4-in. (1.9-cm) diameter cable	0.06 (0.008) 0.35 (0.048)	7 (2.1) 26 (7.9)
Eight-in. (20.3-cm) diameter concrete-filled pipe	0.135 (0.019)	1.5 (0.46)
Concrete planter barrier	1.08 (0.15)	31.2 (9.5)
Cable barrier [200-ft (60.9-m) anchorage spacing]*		
One cable @ 3/4-in. (1.9-cm) dia.	0.1 (0.014)	40 (12)
Two cables @ 3/4-in. (1.9-cm) dia.	0.2 (0.028)	40 (12)
Three cables @ 3/4-in. (1.9-cm) dia.	0.338 (0.047)	40 (12)
Four cables @ 3/4-in. (1.9-cm) dia.	0.418 (0.058)	40 (12)
One cable @ 1-in. (2.5-cm) dia.	0.15 (0.021)	40 (12)
Two cables @ 1-in. (2.5-cm) dia.	0.34 (0.047)	40 (12)
Three cables @ 1-in. (2.5-cm) dia.	0.506 (0.07)	40 (12)
Four cables @ 1-in. (2.5-cm) dia.	0.706 (0.098)	40 (12)
Reinforced-concrete retaining wall** 10 in. (25.4 cm) thick 21 in. (53.3 cm) thick 3.28 ft (1 m) wall	0.157 (0.022)	None
Cable barrier – two 3/4-in. (1.9-cm)	0.36 (0.05)	13 (3.96)

* Based on analytical modeling, using BIRM 3D (PDC-TR90-2) or other finite element analysis process

**Of the wall designs, the shorter and thinner section 1 meter wall is the most efficient, based on K rating.

APPENDIX E EXAMPLES FOR PROTECTION AGAINST TERRORIST VEHICLE BOMBS

E-1 SCOPE.

This appendix contains examples for determining the design of vehicle barrier systems. The information contained herein is intended for informational purposes only.

E-2 NON-GOVERNMENT PUBLICATIONS.

Means, R.S., "Building Construction Cost Data", 65th Edition, 2007.

E-3 DEFINITIONS.

The definitions in Chapter 3 of this UFC apply to this appendix.

E-4 EXAMPLES.

E-4.1 Example 1.

Administrative Building 827 (Figure E-2) must be protected against a terrorist vehicle bomb. The structure is a single-story, reinforced-concrete building. The following factors apply:

a. A high threat level is considered. The design basis threat has been established as a moving vehicle with a gross weight of 15,000 lbs (6,818 kg), including 1,100 lbs (500 kg) of explosives, traveling at 50 mph (80 kph). This combination of vehicle size and speed will develop 1,253 ft-lbf (173 kgf-m) of energy on impact (Table).

b. Assume an asset value of 0.8 for Building 827. For a moving vehicle bomb as described above, this corresponds to a medium level of protection, according to UFC 4-020-01. The damage to the building will be repairable. No permanent deformation will occur in primary structural members.

c. For a medium level of protection, some injury from debris is anticipated, but serious injury or death is unlikely.

Referring to Figure E-2, the lines of approach are perimeter roads on the north and west sides of the building. Perimeter passive barriers and an active barrier on the west entrance to the facility will be required. A candidate active vehicle barrier system might be one of the example systems described in Table A-1. For the perimeter fence, a candidate passive barrier could be the bollard system shown in Figure 6-1.

Using UFC 4-020-01, the required standoff distance for a minimal level of damage to the building from 1,100 lbs (500 kg) of explosives is 310 ft (95 m). Because there is about 320 ft (97 m) available for standoff at the location closest to the perimeter (at Building 700), a medium level of protection can be secured. In this case, the asset value and high threat level indicate some injury is allowable, and minor damage to the structure is acceptable.

Based on the performance characteristics of the example barrier system, the penetration distance of the design threat vehicle is 27 ft (8 m). Adding this distance to the distance required for mitigating the explosive effects, the total standoff distance between the barrier and the building should be at least 337 ft (103 m). Because this standoff distance is not available for Building 827 under current site conditions, the next step would be facility hardening or the acceptance of more damage to the structure.

Passive barriers along the fence line should be designed to allow little or no penetration; the available standoff distance is already at the marginal level to protect personnel against death and injury. Selection of the concrete-filled bollard system (Figure 6-3) will provide adequate penetration resistance, because the approach is parallel to the barrier (77% of the impact load from Table).

Figure E-2 Site Plan for Examples

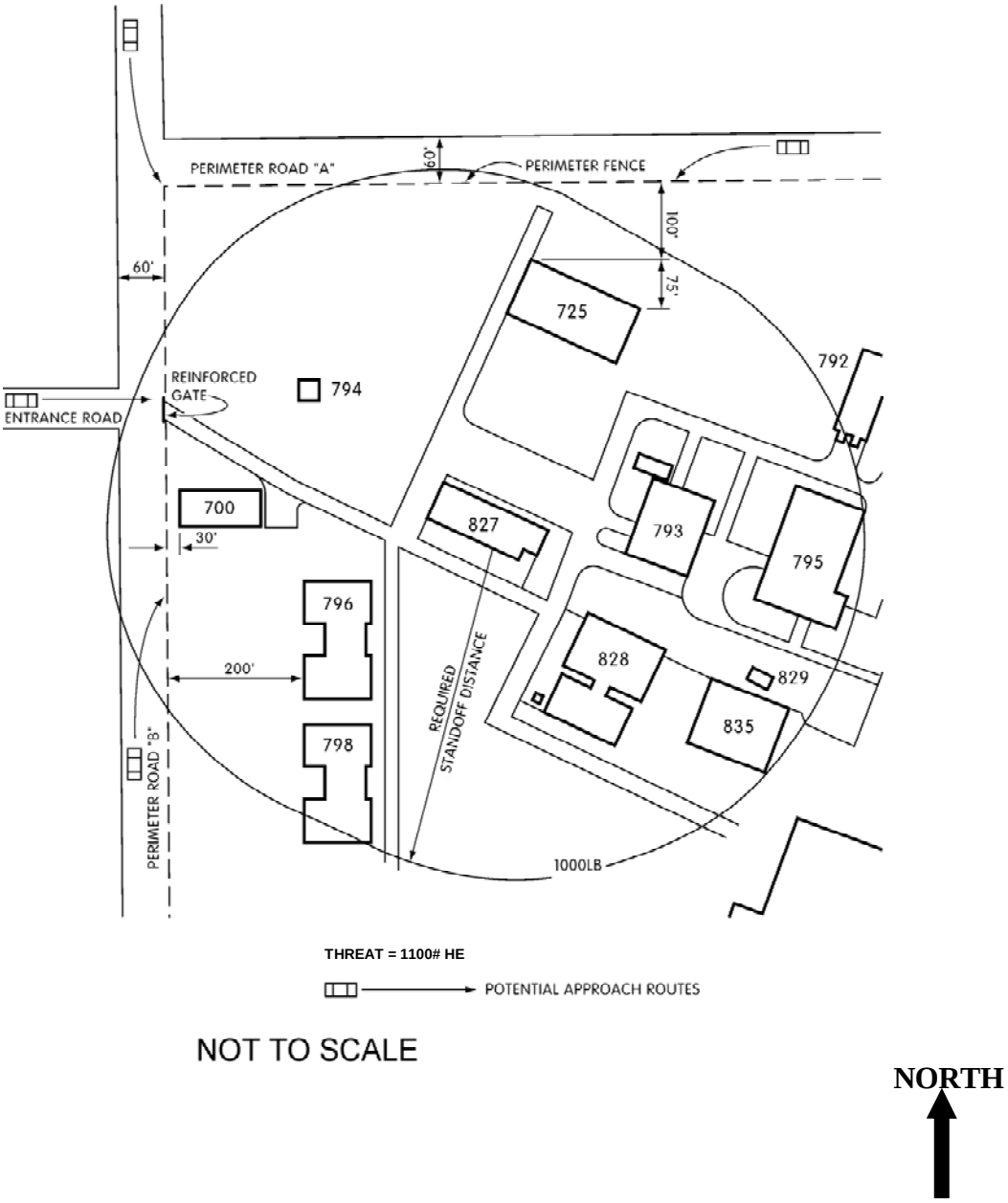

E-4.2 **Example 2**.

Referring to Figure E-2, the target buildings in this case are 796 and 798. Perimeter Road "B" has a 60-ft (18-m) offset (distance from the barrier to the restricting opposite curb). Using Table , a vehicle traveling at 50 mph (80 kph) can safely turn on a maximum 167-ft (51 m) radius curve without skidding. At this speed and angle of approach to the barrier, the vehicle will strike the barrier at an angle. Due to the angle of impact (Table), the speed directed at the barrier is 76.6 percent of the 50-mph (80-kph) speed, or 38 mph (61 m). Using Table and rounding up to the next highest speed [40 mph (64 kph)], the kinetic energy transferred to the barrier will be 214,000 ft-lbf (29 kgf-m) if the design basis threat is a moving 4,000-lb (1,818-kg) vehicle, and 802,000 ft-lbf (111 kgf-m) if the design basis threat is a moving 15,000-lb (6,818-kg) vehicle.

Once the kinetic energy has been calculated, refer to **Error! Reference source not found.**D for a listing of passive barriers and penetration distances that can be used to select the most effective barrier. Anchored Jersey barriers could be used for the threat of a moving 4,000-lb (1,818-kg) vehicle, and a bollard system or concrete planter would be the only passive barriers that would be capable of stopping a 15,000-lb (6,818-kg) vehicle. For the larger threat, it would be appropriate to install concrete blocks as shown in Figure and space them in accordance with the information from Table to reduce the vehicle speed to 30 mph (48 kph) or less.

APPENDIX F VEHICLE BARRIER DEBRIS MINIMIZATION AND EFFECTS ON COUNTER-MOBILITY

F-1 GENERAL.

Barriers are widely used in Entry Control Facilities/Access Control Points (ECF/ACP) and as perimeter boundaries to effectively control traffic. They can be successful in preventing entry of a suspected vehicle bomb into an installation; however, barriers may not prevent detonation of the bomb at the ECF/ACP. The barriers typically used in ECF/ACPs are designed to resist vehicle impact loads, not blast loads. The blast loading of a barrier wall can result in breakup of the barrier and subsequent throw of debris toward the facility being protected by the barrier. This debris has the potential of being thrown great distances, depending on the explosive quantity in the vehicle bomb. The debris can range in size from small, penetrating pieces to whole barrier sections, presenting a significant hazard to personnel, and possibly structures, near the detonation site. Control of this debris, as well as control of traffic, should be considered when selecting and installing a barrier system.

F-2 BARRIER RESPONSE TO EXPLOSIVE LOAD TESTING.

A large test program, Barrier Assessment for Safe Standoff (BASS), was conducted in 2001 for the USAF Force Protection Battlelab (FPB). Full-scale ECF/ACP vehicle barriers were subjected to detonations of bare explosives. The primary objectives of the effort were to analyze the secondary debris hazard for typical reinforced concrete ECF/ACP vehicle barriers and to identify barrier modifications that would minimize or eliminate this debris hazard.

Twelve barrier tests were conducted, with two barriers used per test. Various barrier, charge weight, and standoff distance configurations were tested. The tested barriers included:

- Jersey
- Jersey with soil revetment
- Bitburg
- Bitburg with soil revetment
- Jersey with polymer liner applied
- Cellular Jersey with polymer liner applied
- Jersey with rock/gravel fill revetment
- Back-to-back Bitburgs
- Texas
- Plastic, sand-filled barrier

Charges of Ammonium Nitrate/Fuel Oil (ANFO) in three weights (600, 2450, and 12,200 lbs [272, 1114, and 5545 kg]) and two standoff distances (10 and 35 ft [3.05 and 10.7 m]) were used in the test scenarios. Data collection included barrier debris pickup in designated areas behind each barrier, high-speed video of debris flight to aid in measuring debris velocities, documentation of the barrier response to the blast load, and free-field pressure measurements at specific locations in the debris fields.

Based on the barrier debris collected and analyzed in this study, some barrier systems are more effective than others at reducing the potential secondary debris hazard from a vehicle bomb detonating at an ECF/ACP. The addition of a soil revetment to common barrier configurations significantly reduces debris hazards. Depending on the amount of explosives and the standoff distance from the barrier to the charge, the barriers with a soil revetment either do not break up, or the debris are thrown considerably lesser distances than the same barrier configuration without soil revetment. A rock/gravel revetment presents only a slightly worse hazard than a soil revetment, if only the throw of the barrier debris is considered. Maximum debris distances measured from tests with Jersey reinforced concrete barriers backed by a rock/gravel revetment exceeded debris distances measured in tests of Jersey barriers backed by a soil revetment by less than 20%. It should be noted, however, that debris from the rock/gravel revetment could also be thrown and could cause damage (such as window breakage) to buildings within the installation.

The polymer liner applied to a Jersey barrier does not offer any improvement to the debris hazard from a Jersey barrier. Lightweight concrete and sand-filled plastic barriers produce significantly reduced debris hazards. This may seem

attractive in selecting a barrier system to minimize barrier debris throw upon detonation of a vehicle bomb. However, subsequent counter-mobility testing of these barriers showed failure in stopping the vehicle and preventing access through an ECF/ACP, making them undesirable for use at an ECF/ACP.

The tests also showed that the vehicle-to-barrier standoff used at an ECF/ACP is equally important. Generally, using terminology from UFC 4-022-01, this standoff distance refers to the distance between the access control zone (inspection site) and the final debris barriers in the response zone. The larger 35-ft (10.7-m) standoff decreased debris hazards for all barrier systems tested. It was recommended that the standoff distances be increased from 10 ft (3.05 m) to 35 ft (10.7 m) at ECF/ACPs, where possible. It is recognized that a vehicle could potentially move through the access control zone without stopping and through the response zone to impact a barrier. If the vehicle bomb detonates while in direct contact with the barrier, the debris throw is obviously greater than if the bomb detonates 10 ft (3.05 m) or 35 ft (10.7 m) away from the barrier. The use of low-debris barriers in this case is even more attractive.

F-3 LOW-DEBRIS BARRIER COUNTER-MOBILITY EVALUATION.

Barriers qualified as low-debris producing barriers when exposed to detonations of typical vehicle bombs do not necessarily meet counter-mobility criteria. Barriers that have been proven to minimize, or eliminate, debris hazards from an explosive threat must still be validated for entry control capabilities. Both detonation response and counter-mobility issues should be addressed when selecting a barrier system for a particular base function, such as in an ECF/ACP.

For instance, the lightweight concrete and sand-filled plastic barriers proven to be low-debris barriers in the 2001 BASS tests did not perform well in subsequent crash tests. The Barriers for Reduced-debris and Counter-mobility Effects (BRACE) test program involved testing of these barrier types for counter-mobility. A baseline performance test was first conducted on a line of ten standard, reinforced concrete Jersey barriers tied together with steel cables. A 15,000-lb (6,820-kg) truck impacted the center of the line of barriers at 30 mph (48 kph). While the line of Jersey barriers successfully stopped the vehicle, neither the lightweight concrete nor the sand-filled plastic barrier was able to stop the vehicle. Two new low-debris vehicle barrier concepts were later devised and tested in another FPB-funded test series, Vehicle Impact Performance Evaluation of Reduced-debris, Counter-mobility Barriers (VIPER-CB).

The low-debris barriers tested in the later program were Hesco bastion concertainers (typically used as perimeter barriers and to provide ballistic and fragment protection) and a modification of the lightweight concrete Jersey barrier with polymer coating. The lightweight concrete, polymer-coated barriers and the steel gate successfully defeated the threat of a 15,000-lb (6,820-kg) truck traveling at 30 mph (48 kph). The depth of penetration of the truck was 16 ft (4.9 m) for the lightweight concrete, polymer-coated barriers. The Hesco bastion

concertainers were tested with a 15,000-lb (6,820-kg) truck traveling at 50 mph (80 kph). The concertainers successfully stopped the truck in approximately 5 ft (1.5 m), with no penetration of the payload.

The recommendations from the tests described in this section are to use both low-debris, counter-mobility barriers (Hesco bastion and lightweight concrete, polymer-coated barriers). The low-debris systems adequately protect against the standard threat of a 15,000-lb (6,820-kg) vehicle impacting at 30 mph (48 kph). The Hesco bastion barriers do not require any anchoring. They are simply stacked in layers. To defeat the standard threat above, two rows of barriers on the bottom with a staggered row of barriers on top are sufficient, as shown in Figure F-3. Concrete anchors to existing thick roadways or to specially placed foundations should be used with the polymer-coated, lightweight concrete barrier system. Figure F-4 shows the cabling and anchor system used to test this system. For the test, the polymer-coated, lightweight concrete Jersey barriers were placed in a line and connected with three 1-in steel cables, as shown in Figure F-4. The cable was 1-in diameter, 6 x 36 extra improved plow steel, with independent wire rope center. A 4-ft long loop was created in the cables at the right end of the line of barriers. The purpose of this loop is to allow some slack in the cable; this reduces the peak tensile force but allows additional penetration of the truck Steel shackles were used to connect the cables to the anchor plate and 1-in cable clips at a 6-in spacing were used to tie the ends of the cables. For this example, the barrier anchoring system was designed to meet a load of 75,000 lb of force in each cable. Anchoring for a similar barrier system should at least meet the same anchoring requirement.

Figure F-3 Hesco Bastion Concertainer Barrier, Oblique View

Figure F-4 Polymer-Coated, Lightweight Concrete Barrier System

F-4 **RESTORATION OF DAMAGED BARRIERS**.

Another critical consideration in selection of vehicle barriers for use in an ECF/ACP or in other perimeter protection is the amount of time required to restore the barrier system to 100% capability after it has been damaged by exposure to a vehicle bomb detonation. Some barriers can be fully restored to their original protection capability within minutes after the removal of the vehicle debris. Other barrier types may take months to repair and restore to 100%.

Restoration time depends on the type of barrier, whether or not it has a revetment, the size of the vehicle bomb, and the standoff distance between the bomb and the barrier at the time of detonation. Concrete barriers exposed to low design basis threats will have minimal breakup and may just topple over or be slightly displaced. In such a case, the barriers could be reused and re-anchored back into the barrier system. Other barrier types may need to be completely replaced with new barriers. If a revetment was being used, it will have to be rebuilt when the barriers are replaced. Estimates of time required to restore the barrier system to 100% capability is critical information to consider in vehicle barrier selection.