UFC 4-023-03
25 January 2005

UNIFIED FACILITIES CRITERIA (UFC)

DESIGN OF BUILDINGS TO RESIST PROGRESSIVE COLLAPSE

APPROVED FOR PUBLIC RELEASE; DISTRIBUTION UNLIMITED

UNIFIED FACLITIES CRITERIA (UFC)

DESIGN OF BUILDINGS TO RESIST PROGRESSIVE COLLAPSE

Any copyrighted material included in this UFC is identified at its point of use. Use of the copyrighted material apart from this UFC must have the permission of the copyright holder.

NAVAL FACILITIES ENGINEERING COMMAND (Preparing Activity)

U.S. ARMY CORPS OF ENGINEERS

AIR FORCE CIVIL ENGINEER SUPPORT AGENCY

Record of Changes

Change No.	Date	Location

FOREWORD

The Unified Facilities Criteria (UFC) system is prescribed by MIL-STD 3007 and provides planning, design, construction, sustainment, restoration, and modernization criteria, and applies to the Military Departments, the Defense Agencies, and the DoD Field Activities in accordance with USD(AT&L) Memorandum dated 29 May 2002. UFC will be used for all DoD projects and work for other customers where appropriate.

UFC are living documents and will be periodically reviewed, updated, and made available to users as part of the Services' responsibility for providing technical criteria for military construction. Headquarters, U.S. Army Corps of Engineers (HQUSACE), Naval Facilities Engineering Command (NAVFAC), and Air Force Civil Engineer Support Agency (AFCESA) are responsible for administration of the UFC system. Defense agencies should contact the preparing service for document interpretation and improvements. Technical content of UFC is the responsibility of the cognizant DoD working group. Recommended changes with supporting rationale should be sent to the respective service proponent office by the following electronic form: Criteria Change Request (CCR). The form is also accessible from the Internet sites listed below.

UFC are effective upon issuance and are distributed only in electronic media from the following sources:

Unified Facilities Criteria (UFC) Index http://65.204.17.188//report/doc_ufc.html.
USACE TECHINFO Internet site http://www.hnd.usace.army.mil/techinfo/index.htm.
NAVFAC Engineering Innovation and Criteria Office Internet site http://dod.wbdg.org/.
Construction Criteria Base (CCB) system maintained by the National Institute of Building Sciences at Internet site http://www.ccb.org/.

Hard copies of UFC printed from electronic media should be checked against the current electronic version prior to use to ensure that they are current.

AUTHORIZED BY:

DONALD L. BASHAM, P.E.
Chief, Engineering and Construction Division
U.S. Army Corps of Engineers

DR. JAMES W WRIGHT, P.E.
Chief Engineer
Naval Facilities Engineering Command

KATHLEEN I. FERGUSON, P.E.
The Deputy Civil Engineer
DCS/Installations & Logistics
Department of the Air Force

Dr. GET W. MOY, P.E.
Director, Installations Requirements and Management
Office of the Deputy Under Secretary of Defense (Installations and Environment)

CONTENTS

Page

CHAPTER 1 INTRODUCTION 1-1

Paragraph 1-1 PURPOSE AND SCOPE 1-1
1-2 APPLICABILITY. 1-1
1-3 GENERAL. 1-1
1-3.1 Significance of Progressive Collapse. 1-1
1-3.2 Hardening of Structures to Resist Initial Damage 1-2
1-3.3 Design Approaches. 1-2
1-3.4 Existing Design Guidelines. 1-3
1-4 SUMMARY OF PROGRESSIVE COLLAPSE DESIGN PROCEDURE. 1-4
1-5 INSPECTION REQUIREMENTS. 1-4
1-6 SECURITY ENGINEERING UFC SERIES. 1-4

CHAPTER 2 PROGRESSIVE COLLAPSE DESIGN REQUIREMENTS FOR NEW AND EXISTING CONSTRUCTION

Paragraph 2-1 DESIGN REQUIREMENTS FOR NEW AND EXISTING CONSTRUCTION 2-1
2-1.1 Very Low Level of Protection Design Requirement. 2-1
2-1.2 Low Level of Protection Design Requirement. 2-1
2-1.3 Medium and High Level of Protection Design Requirement.. 2-4
2-2 COMMON DESIGN REQUIREMENTS. 2-6
2-2.1 Effective Column and Wall Height. 2-6
2-2.2 Upward Loads on Floors and Slabs. 2-6

CHAPTER 3 DESIGN STRATEGIES

Paragraph 3-1 TIE FORCES. 3-1
3-1.1 Load and Resistance Factor Design for Tie Forces. 3-1
3-1.2 Required Tie Strength. 3-2
3-1.3 Structural Elements and Connections With Inadequate Design Tie Strength. 3-2
3-2 ALTERNATE PATH METHOD. 3-4
3-2.1 General. 3-4
3-2.2 Load and Resistance Factor Design for Alternate Path Method. 3-5
3-2.3 Removal of Load-Bearing Elements for the Alternate Path Method. 3-5
3-2.4 Factored Loads for Alternate Path Method. 3-10
3-2.5 Material Properties. 3-11
3-2.6 Damage Limits for the Structure. 3-14

CONTENTS, CONTINUED

Page

3-2.7 Acceptability Criteria for Structural Elements and Connections. 3-14
3-2.8 Linear Static Analysis Procedure. 3-19
3-2.9 Nonlinear Static Analysis Procedure. 3-20
3-2.10 Nonlinear Dynamic Analysis Procedure. 3-21

CHAPTER 4 REINFORCED CONCRETE DESIGN REQUIREMENTS

Paragraph 4-1 MATERIAL PROPERTIES FOR REINFORCED CONCRETE. 4-1
4-2 REINFORCED CONCRETE TIE FORCE REQUIREMENTS. 4-1
4-2.1 General. 4-1
4-2.2 Strength Reduction Factor Φ for Reinforced Concrete Tie Forces 4-2
4-2.3 Proportioning of Ties. 4-2
4-2.4 Continuity and Anchorage of Ties. 4-2
4-2.5 Internal Ties. 4-2
4-2.6 Peripheral Ties. 4-3
4-2.7 Horizontal Ties to External Columns and Walls. 4-4
4-2.8 Vertical Ties. 4-4
4-2.9 Elements with Deficient Vertical Design Tie Strengths. 4-5
4-3 ALTERNATE PATH METHOD FOR REINFORCED CONCRETE. 4-6
4-3.1 Acceptability Criteria for Reinforced Concrete. 4-6
4-3.2 Deformation Limits for Reinforced Concrete. 4-8
4-4 ADDITIONAL DUCTILITY REQUIREMENTS. 4-8

CHAPTER 5 STRUCTURAL STEEL DESIGN REQUIREMENTS

Paragraph 5-1 MATERIAL PROPERTIES FOR STRUCTURAL STEEL. 5-1
5-2 STEEL TIE FORCE REQUIREMENTS. 5-2
5-2.1 General. 5-2
5-2.2 Strength Reduction Factor Φ for Steel Tie Forces 5-2
5-2.3 Horizontal Steel Ties 5-2
5-2.4 Internal Ties. 5-3
5-2.5 Peripheral Ties. 5-4
5-2.6 Tying of External Columns. 5-4
5-2.7 Vertical Ties. 5-5
5-2.8 Columns with Deficient Vertical Tie Forces. 5-5

CONTENTS, CONTINUED

Page

5-3 ALTERNATE PATH METHOD FOR STRUCTURAL STEEL 5-5
5-3.1 Acceptability Criteria for Structural Steel..... 5-5
5-3.2 Deformation Limits for Structural Steel. 5-8
5-4 ADDITIONAL DUCTILITY REQUIREMENTS. 5-8

CHAPTER 6 MASONRY DESIGN REQUIREMENTS

Paragraph 6-1 MATERIAL PROPERTIES FOR MASONRY. 6-1
6-2 MASONRY TIE FORCE REQUIREMENTS. 6-1
6-2.1 General. 6-1
6-2.2 Strength Reduction Factor Φ for Masonry Tie Forces 6-1
6-2.3 Proportioning of Ties. 6-1
6-2.4 Continuity and Anchorage of Ties. 6-1
6-2.5 Internal Ties. 6-2
6-2.6 Peripheral Ties. 6-3
6-2.7 Horizontal Ties to External Columns and Walls. 6-3
6-2.8 Vertical Ties. 6-4
6-2.9 Load-Bearing Walls and Columns with Deficient Vertical Tie Forces. 6-5
6-3 ALTERNATE PATH METHOD FOR MASONRY. 6-7
6-3.1 Acceptability Criteria for Masonry. 6-7
6-3.2 Deformation Limits for Masonry. 6-8
6-4 ADDITIONAL DUCTILITY REQUIREMENTS. 6-9

CHAPTER 7 WOOD DESIGN REQUIREMENTS

Paragraph 7-1 MATERIAL PROPERTIES FOR WOOD. 7-1
7-2 WOOD TIE FORCE REQUIREMENTS. 7-1
7-2.1 General. 7-1
7-2.2 Strength Reduction Factor Φ for Wood Tie Forces 7-2
7-2.3 Continuity and Anchorage of Ties. 7-2
7-2.4 Internal Ties. 7-2
7-2.5 Peripheral Ties. 7-3
7-2.6 Horizontal Ties to External Walls and Columns. 7-3
7-2.7 Vertical Ties. 7-4
7-2.8 Load-bearing Elements with Deficient Vertical Tie Forces. 7-5
7-3 ALTERNATE PATH METHOD FOR WOOD. 7-6
7-3.1 Acceptability Criteria for Wood. 7-6
7-3.2 Deformation Limits for Wood. 7-7
7-4 ADDITIONAL DUCTILITY REQUIREMENTS. 7-7

CONTENTS, CONTINUED

Page

CHAPTER 8 COLD-FORMED STEEL DESIGN REQUIREMENTS

Paragraph 8-1 MATERIAL PROPERTIES FOR COLD-FORMED STEEL. .. 8-1
8-2 COLD-FORMED STEEL TIE FORCE REQUIREMENTS. 8-1
8-2.1 General. 8-1
8-2.2 Strength Reduction Factor Φ for Steel Tie Forces 8-1
8-2.3 Continuity and Anchorage of Ties. 8-1
8-2.4 Internal Ties. 8-2
8-2.5 Peripheral Ties. 8-3
8-2.6 Horizontal Ties to External Walls and Columns. 8-3
8-2.7 Vertical Ties. 8-4
8-2.8 Load-bearing Elements with Deficient Vertical Tie Forces. 8-4
8-3 ALTERNATE PATH METHOD FOR COLD-FORMED STEEL. 8-5
8-3.1 Acceptability Criteria for Cold-Formed Steel. 8-5
8-3.2 Deformation Limits for Cold-Formed Steel. 8-7
8-4 ADDITIONAL DUCTILITY REQUIREMENTS. 8-8

APPENDIX A REFERENCES A-1

APPENDIX B COMMENTARY B-1

Paragraph B-1 INTRODUCTION. B-1
B-2 DESIGN REQUIREMENTS. B-1
B-3 TIE FORCES. B-2
B-3.1 Reinforced Concrete Tie Forces. B-3
B-3.2 Steel Tie Forces. B-9
B-3.3 Masonry Tie Forces. B-9
B-3.4 Wood Frame Tie Forces. B-12
B-3.5 Cold-formed Steel Tie Forces. B-13
B-4 ALTERNATE PATH METHOD. B-13
B-4.1 Removal of Load-Bearing Elements. B-13
B-4.2 Factored Loads for Alternate Path Method. B-14
B-4.3 Damage Limits. B-15
B-4.4 Plastic Hinge Considerations for AP Modeling of Steel Structures B-15
B-4.5 Beam-Column Considerations for AP Modeling of Steel Structures B-15
B-4.6 Deformation Limits. B-17
B-4.7 Time Effect Factor for Wood. B-18
B-5 ADDITIONAL DUCTILITY REQUIREMENTS. B-18

CONTENTS, CONTINUED

Page

APPENDIX C WORKED REINFORCED CONCRETE FRAME EXAMPLE C-1

Paragraph C-1 INTRODUCTION. C-1
C-2 PRELIMINARY DESIGN. C-1
C-2.1 Scope of Model. C-1
C-2.2 Model Assumptions. C-1
C-2.3 Loading Assumptions. C-2
C-2.4 Load Combinations (per IBC 2003, Section 1605). C-2
C-2.5 Member Sizes. C-4
C-3 TIE FORCE CHECK. C-4
C-4 ALTERNATE PATH SETUP. C-5
C-4.1 Progressive Collapse Load Combination. C-7
C-4.2 Plastic Hinges. C-7
C-5 ALTERNATE PATH ANALYSIS. C-8
C-5.1 Develop Preliminary Model. C-8
C-5.2 Assign Groups. C-9
C-5.3 Define and Assign Hinge Properties. C-9
C-5.4 Define Nonlinear Analysis Cases. C-10
C-5.5 Run Analysis. C-11
C-5.6 Progression of Hinge Formations. C-11
C-5.7 Shear Capacity and Other Capacity Checks. C-15
C-5.8 Alternate Path Method Complete. C-15

APPENDIX D WORKED STRUCTURAL STEEL FRAME EXAMPLE D-1

Paragraph D-1 INTRODUCTION. D-1
D-2 PRELIMINARY DESIGN. D-1
D-2.1 Scope of Model. D-1
D-2.2 Model Assumptions. D-1
D-2.3 Loading Assumptions. D-2
D-2.4 Load Combinations (per IBC 2003). D-3
D-2.5 Member Sizes. D-3
D-3 TIE FORCE CHECK. D-4
D-4 ALTERNATE LOAD PATH D-6
D-4.1 Progressive Collapse Load Combination. D-8
D-4.2 Plastic Hinges. D-8
D-5 ALTERNATE LOAD PATH ANALYSIS. D-9
D-5.1 Develop Preliminary Model. D-9
D-5.2 Assign Groups. D-10
D-5.3 Define and Assign Hinge Properties. D-10
D-5.4 Define Nonlinear Analysis Cases. D-11
D-5.5 Run Analysis. D-12

CONTENTS, CONTINUED

Page

D-5.6 Progression of Hinge Formations. D-12
D-5.7 Shear Capacity and Other Capacity Checks.....D-15
D-5.8 Alternate Path Method Complete. D-15

APPENDIX E MASONRY CONNECTIONS FOR PROGRESSIVE COLLAPSE DESIGN E-1

APPENDIX F GUIDANCE FOR PROGRESSIVE COLLAPSE DESIGN IN WOOD FRAME STRUCTURES F-1

Paragraph F-1 GENERAL..... F-1
F-2 TIE FORCES FOR WOOD FRAME CONSTRUCTION. F-1
F-2.1 Example Building. F-1
F-2.2 Required Tie Forces. F-3
F-2.3 Tie Force Connections. F-3
F-3 ALTERNATE PATH METHOD FOR WOOD FRAME CONSTRUCTION. F-8
F-3.1 Example Building. F-11
F-3.2 Summary of Alternate Path Example. F-19

APPENDIX G INSPECTION REQUIREMENTS G-1

FIGURES

Figure	Title	Page
2-1	Design Process for VLLOP in New and Existing Construction	2-2
2-2	Design Process for LLOP in New and Existing Construction	2-3
2-3	Design Process for MLOP and HLOP in New and Existing Construction	2-5
3-1	Schematic of Tie Forces in a Frame Structure	3-3
3-2	Location of External Column Removal for MLOP and HLOP Structures	3-7
3-3	Location of Internal Column Removal for MLOP and HLOP Structures	3-7
3-4	Removal of Column From Alternate Path Model	3-8
3-5	Location of External Load-Bearing Wall Removal for MLOP and HLOP Structures	3-9
3-6	Location of Internal Load-Bearing Wall Removal for MLOP and HLOP Structures	3-10
3-7	Linear and Nonlinear Static Load Locations for External and Internal Column Removal	3-12
3-8	Linear and Nonlinear Static Load Locations for External and Internal Load-Bearing Wall Removal	3-13
3-9	Inserting Hinge and Moments into Linear Static Alternate Path Model	3-15
3-10	Measurement of Hinge Rotation □ After Formation of Plastic Hinges	3-18
3-11	Sidesway and Member End Rotations (□) for Frames	3-18
4-1	Axial Load and Moment at Balanced Strain	4-7
5-1	Example of Tying the Columns of a Steel Building	5-3
5-2	Example of General Tying of a Steel Building	5-3
B-1	Calculation of Upper Bound on the Basic Strength	B-4
B-2	Determination of l_r for Frame Construction	B-5
B-3	Determination of l_r for Spine Wall Construction	B-5
B-4	Details for Anchoring Internal Ties to Peripheral Ties	B-6
B-5	Peripheral Tie Detail for Corner Columns	B-7
B-6	Lateral Support For Stiffened Sections	B-8
B-7	Lateral Support For Partition Walls	B-9
B-8	Lateral Support For Intersecting or Return Walls	B-10
B-9	Lateral Support For Piers or Stiffened Sections	B-11
B-10	Lateral Support For Substantial Partitions	B-11
B-11	Fully Restrained Connections (from GSA 2003)	B-20
B-12	Partially Restrained Connections (from GSA 2003)	B-21
B-13	Weak Axis Connections (from GSA 2003)	B-22
C-1	Reinforced Concrete Building Plan	C-3
C-2	Reinforced Concrete Building Elevation	C-3
C-3	Plan of Removed Column	C-6
C-4	Elevation of Removed Column	C-6

FIGURES, CONTINUED

Figure	Title	Page
C-5	Nonlinear Hinge Definition	C-8
C-6	Completed Static Nonlinear Model	C-9
C-7	Input Screens for Nonlinear Hinge Properties	C-10
C-8	Progressive Collapse Load Combination Input	C-11
C-9	Hinges and Deformed Shape (isometric view)	C-12
C-10	Hinges and Deformed Shape (x-x single bay)	C-13
C-11	Hinges and Deformed Shape (y-y single bay)	C-13
C-12	Hinges and Deformed Shape for Final Design	C-14
D-1	Steel Building Plan	D-2
D-2	Steel Building Elevation	D-3
D-3	Steel Beam to Column Connection Typical Tie Force Calculation Example	D-6
D-4	Plan of Removed Column	D-7
D-5	Elevation of Removed Column	D-7
D-6	Nonlinear Hinge Definition	D-8
D-7	Completed Nonlinear Static Model	D-10
D-8	Input Screens for Nonlinear Hinge Properties	D-11
D-9	Progressive Collapse Load Combination Input	D-12
D-10	Hinges and Deformed Shape (isometric view)	D-13
D-11	Hinges and Deformed Shape (x-x single bay)	D-13
D-12	Hinges and Deformed Shape (y-y single bay)	D-14
D-13	Hinges and Deformed Shape for Final Design	D-15
E-1	Wood Ledger Wood Joist Support at Exterior Brick Cavity Wall	D-15
E-2	Steel Ledger Wood Joist Support at Exterior Brick Cavity Wall	D-15
E-3	Wood Rafter at Exterior Block Wall	D-15
E-4	Wood Joist Perpendicular to Brick Cavity Wall Joist Hanger Support	D-15
E-5	Wood Joist Parallel to Brick Cavity Wall Joist Hanger Support	D-15
E-6	Precast Concrete Slab Through Brick Cavity Interior Wall	D-15
E-7	Precast Concrete Slab at Brick Cavity Exterior Wall	D-15
E-8	Precast Floor Planks at Exterior Block Wall	D-15
E-9	Precast Floor Planks Through Interior Block Wall	D-15
E-10	Cast in Place Floor at Block Exterior Wall	D-15
E-11	Cast in Place Floor Through Block Interior Wall	D-15
F-1	Depiction of Barracks Buildings Used in Tie Force Example.	F-2
F-2	Framing Plan Schematic for Barracks Building	F-2
F-3	Schematic of Internal and Horizontal Ties	F-6
F-4	Schematic of Peripheral and Horizontal Ties; N-S Detail	F-6
F-5	Schematic of Peripheral and Horizontal Ties; E-W Detail	F-7
F-6	Holdown Installation for Vertical Ties (Single Shear Shown)	F-8
F-7	Illustrations of Rim Beam Use in Wood Frame Construction	F-9
F-8	Illustration of Potential Bridging Mechanism Utilizing Rim Beam	F-10
F-9	Potential Redistribution of Floor Loads	F-10
F-10	Cross Section of North-South Exterior Wall	F-14
F-11	Cellular Layout	F-17
F-12	Notional Exterior Load Bearing Wall Removal	F-18

TABLES

	Title	Page
3-1	Acceptability Criteria for Elements and Connections and Subsequent Action for AP Model	3-16
4-1	Over-Strength Factors for Reinforced Concrete	4-1
4-2	Removal of Deficient Reinforced Concrete Vertical Tie Elements	4-5
4-3	Acceptability Criteria and Subsequent Action for Reinforced Concrete	4-6
4-4	Deformation Limits for Reinforced Concrete	4-9
5-1	Over-Strength Factors for Structural Steel	5-1
5-2	Acceptability Criteria and Subsequent Action for Structural Steel	5-5
5-3	Deformation Limits for Structural Steel	5-9
6-1	Minimum Properties for Masonry Walls with Vertical Ties	6-5
6-2	Removal of Deficient Masonry Vertical Tie Elements	6-6
6-3	Acceptability Criteria and Subsequent Action for Masonry	6-7
6-4	Deformation Limits for Masonry	6-9
7-1	Removal of Deficient Wood Vertical Tie Elements	7-5
7-2	Acceptability Criteria and Subsequent Action for Wood	7-6
7-3	Deformation Limits for Wood	7-8
8-1	Removal of Deficient Cold-Formed Steel Vertical Tie Elements	8-5
8-2	Acceptability Criteria and Subsequent Action for Cold-Formed Steel	8-6
8-3	Deformation Limits for Cold-Formed Steel	8-8
B-1	Steel Moment Frame Connection Types (from GSA 2003)	B-19
C-1	Reinforced Concrete Member Sizes and Reinforcement	C-4
C-2	Required Tie Forces	C-5
C-3	Nonlinear Hinge Properties (absolute rotation in radians)	C-8
C-4	Properties of Redesigned Members	C-14
D-1	Beam and Column Sizes and Groups	D-4
D-2	Required Tie Forces	D-5
D-3	Nonlinear Hinge Properties (absolute rotation in radians)	D-9
D-4	Beam and Column Sections for Final Design	D-14
F-1	Calculated Tie Forces for Barracks Building	F-3
F-2	Calculations for Tie Force Wood Member and Connection Design	F-4
F-3	Load Carrying Elements	F-11
F-4	Applied Loading (unfactored)	F-11
F-5	Acceptability Criteria Check for 8 x 12 S.Y.P. No. 2 Rim Beam	F-12
F-6	Acceptability Criteria Check for Wall Studs	F-13
F-7	Acceptability Criteria Check for 8 x 12 S.Y.P. No. 2 Girder	F-15
F-8	Acceptability Criteria Check for Columns (4 – 2x6 SYP No. 2)	F-16
F-9	Acceptability Criteria Check for 8 x 12 S.Y.P. No. 2 Rim Beam	F-18
F-10	Acceptability Criteria Check for Wall Studs (2x6 SYP No. 2)	F-19

CHAPTER 1

INTRODUCTION

1-1 PURPOSE AND SCOPE.

This Unified Facilities Criteria (UFC) provides the design requirements necessary to reduce the potential of progressive collapse for new and existing DoD facilities that experience localized structural damage through normally unforeseeable events. This UFC incorporates a prudent, effective, and uniform level of resistance to progressive collapse without expensive or radical changes to typical design practice.

1-2 APPLICABILITY.

This UFC applies to new construction, major renovations, and leased buildings and must be utilized in accordance with the applicability requirements of UFC 4-010-01 *Minimum Antiterrorism Standards for Buildings* or as directed by Service Guidance. See Section 1-6 of UFC 4-010-01 for additional detail on the structures that must be considered.

1-3 GENERAL.

UFC 4-010-01 requires that all new and existing buildings of three stories or more be designed to avoid progressive collapse. Progressive collapse is defined in the commentary of the American Society of Civil Engineers Standard 7-02 *Minimum Design Loads for Buildings and Other Structures* (ASCE 7-02) as “the spread of an initial local failure from element to element, eventually resulting in the collapse of an entire structure or a disproportionately large part of it.” The standard further states that buildings should be designed ”to sustain local damage with the structural system as a whole remaining stable and not being damaged to an extent disproportionate to the original local damage.” As discussed in the commentary of ASCE7-02, “except for specially designed protective systems, it is usually impractical for a structure to be designed to resist general collapse caused by severe abnormal loads acting directly on a large portion of it. However, structures can be designed to limit the effects of local collapse and to prevent or minimize progressive collapse.” The structural design requirements presented herein were developed to ensure prudent precautions are taken when the event causing the initial local damage is undefined and the extent of the initial damage is unknown.

1-3.1 Significance of Progressive Collapse.

Progressive collapse is a relatively rare event, in the United States and other Western nations, as it requires both an abnormal loading to initiate the local damage and a structure that lacks adequate continuity, ductility, and redundancy to resist the spread of damage. However, significant casualties can result when collapse occurs. This is illustrated by the April 19, 1995 bombing of the Alfred P. Murrah building in Oklahoma City, in which the majority of the 168 fatalities were due to the partial collapse

of the structure and not to direct blast effects. The recent escalation of the domestic and international terrorist threat has increased the probability that other US government structures will be attacked with explosives or other violent means.

1-3.2 Hardening of Structures to Resist Initial Damage

As the initiating event is unknown, the requirements in this UFC are not intended to directly limit or eliminate the initial damage. This is consistent with UFC 4-010-01, which applies where there is a known risk of terrorist attack, but no specific terrorist threat is defined; in this case, the goal is to reduce the risk of mass casualties in the event of an attack. For cases where specific explosive threats against a building have been identified, design guidelines for specific blast hardening can be found in UFC 4-013-01 *Structural Design to Resist Explosives Effects for New Buildings* and UFC 4-013-02 *Structural Design to Resist Explosives Effects for Existing Buildings*. **Even if a structure is designed to resist an identified or assumed threat, the progressive collapse requirements of this UFC will still apply**.

1-3.3 Design Approaches.

ASCE 7-02 defines two general approaches for reducing the possibility of progressive collapse: Direct Design and Indirect Design.

1-3.3.1 Direct Design Approaches.

Direct Design approaches include "explicit consideration of resistance to progressive collapse during the design process…" These include: 1) the Alternate Path (AP) method, which requires that the structure be capable of bridging over a missing structural element, with the resulting extent of damage being localized, and 2) the Specific Local Resistance (SLR) method, which requires that the building, or parts of the building, provide sufficient strength to resist a specific load or threat.

1-3.3.2 Indirect Design Approaches.

With Indirect Design, resistance to progressive collapse is considered implicitly "through the provision of minimum levels of strength, continuity and ductility". The commentary in ASCE 7-02 goes on to present general design guidelines and suggestions for improving structural integrity. These include: 1) good plan layout, 2) integrated system of ties, 3) returns on walls, 4) changing span directions of floor slabs, 5) load-bearing interior partitions, 6) catenary action of the floor slab, 7) beam action of the walls, 8) redundant structural systems, 9) ductile detailing, 10) additional reinforcement for blast and load reversal, if the designer must consider explosive loads, and 11) compartmentalized construction. However, no quantitative requirements for either direct or indirect design to resist progressive collapse are provided in ASCE 7-02.

1-3.4 Existing Design Guidelines.

1-3.4.1 British Standards.

England was the first nation to address progressive collapse explicitly in its building standards. The development was initiated by the collapse of the Ronan Point apartment building in 1968, and further motivated by the IRA bombing campaign. The British Standards employ three design approaches for resisting progressive collapse:

- Tie Forces (TF). This indirect design approach enhances continuity, ductility, and structural redundancy by requiring "ties" to keep the structure together in the event of an abnormal loading.
- Alternate Path (AP). This direct method requires that the designer prove that the structure is capable of bridging over a removed structural element and that the resulting extent of damage does not exceed the damage limits. The missing structural element is any element that cannot provide an adequate vertical tie force.
- Specific Local Resistance (SLR). This direct method requires that, for any structural element over which the building cannot bridge, the element must be designed as a "key" or "protected" element, capable of carrying a static pressure loading of 34 kN/m^2 (5 psi).

The British have employed this combined approach for almost 30 years and the effectiveness of the strategy has been illustrated in a number of deliberate attacks on buildings, as discussed in *The UK and European Regulations for Accidental Actions* by D.B. Moore (Moore 2003). Recent proposed modifications to the British Standards and draft Eurocode standards include a risk assessment procedure that will better correlate the level of design for progressive collapse to the particular structure.

1-3.4.2 United States Civilian Standards.

While general design guidance for reducing the potential of progressive collapse are discussed in ASCE 7-02, no quantifiable or enforceable requirements are put forth. Likewise, none of the major United States building codes (e.g., International Building Code, Uniform Building Code, Building Officials and Code Administrators) nor the structural design codes (e.g., American Institute of Steel Construction, American Concrete Institute, The Masonry Society, American Iron and Steel Institute, American Forest and Paper Association) provide specific design requirements.

1-3.4.3 United States Government Standards.

Design guidelines for resisting progressive collapse have been published by the Department of Defense (DoD) in 2001, in the *Interim Antiterrorism/Force Protection Construction Standards--Guidance on Structural Requirements* (ITG 2001), and, by the U.S. General Services Administration (GSA) in 2003, in the *Progressive Collapse Analysis and Design Guidelines for New Federal Office Buildings and Major Modernization Projects* (GSA 2003), to support their building activities. Both

approaches employ the AP method, but with specific modifications that are tailored for the typical threats and structures considered by each organization. This UFC replaces the previous DoD guidance (ITG 2001).

1-4 SUMMARY OF PROGRESSIVE COLLAPSE DESIGN PROCEDURE.

The design requirements presented in this UFC were developed such that two structural response modes are available to provide different levels of resistance to progressive collapse. The first level of progressive collapse design employs Tie Forces, which are based on a "catenary" response of the structure. The second level employs the Alternate Path method, in which the structural mode is "flexural", as the building must bridge across a removed element. A significant portion of the design guidelines and criteria in this UFC are based on the British Standards approach, as discussed in more detail in Appendix B.

For existing and new construction, the level of progressive collapse design for a structure is correlated to the Level of Protection (LOP) that the Project Planning Team develops and provides to the designer. At the lower LOPs [Very Low Level of Protection (VLLOP) and Low Level of Protection (LLOP)], only Indirect Design is employed, by specifying the required levels of Tie Forces. However, in the case that an adequate Tie Force cannot be developed in a vertical structural element, then the Alternate Path method is applied to verify that the structure can bridge over the deficient element. For Medium Level of Protection (MLOP) and High Level of Protection (HLOP), the Alternate Path method is also applied to verify satisfactory flexural resistance in addition to the catenary resistance provided by the Tie Forces. Finally, for MLOP and HLOP, additional ductility requirements are specified for ground floor perimeter vertical load-bearing elements, to improve the resistance to progressive collapse

It is expected that the majority of new and existing DoD facilities will be assigned VLLOP or LLOP ratings and the design to resist progressive collapse will require the application of only the Tie Force criteria. In general, these requirements will be met without much difficulty and can usually be satisfied by application of good connection detailing practice.

1-5 INSPECTION REQUIREMENTS.

Inspection requirements to verify conformance with this UFC are provided in Appendix G. These inspection requirements are modifications to the provisions of the 2003 International Building Code (2003 IBC), which cover construction documents, structural tests and special inspections for buildings that have been designed to resist progressive collapse.

1-6 SECURITY ENGINEERING UFC SERIES.

This UFC is one of a series of security engineering Unified Facilities Criteria that cover minimum standards, planning, preliminary design, and detailed design for security and antiterrorism. The manuals in this series are designed to be used

sequentially by a diverse audience to facilitate development of projects throughout the design cycle. The manuals in this series include the following:

DoD Minimum Antiterrorism Standards for Buildings. UFC 4-010-01 *Minimum Antiterrorism Standards for Buildings* and 4-010-02 *DoD Minimum Standoff Distances for Buildings* establish standards that provide minimum levels of protection against terrorist attacks for the occupants of all DoD inhabited buildings. These UFC are intended to be used by security and antiterrorism personnel and design teams to identify the minimum requirements that must be incorporated into the design of all new construction and major renovations of inhabited DoD buildings. They also include recommendations that should be, but are not required to be, incorporated into all such buildings.

Security Engineering Facility Planning Manual. UFC 4-020-01*Security Engineering Facility Planning Manual* presents processes for developing the design criteria necessary to incorporate security and antiterrorism features into DoD facilities and for identifying the cost implications of applying those design criteria. Those design criteria may be limited to the requirements of the minimum standards, or they may include protection of assets other than those addressed in the minimum standards (people), aggressor tactics that are not addressed in the minimum standards, or levels of protection beyond those required by the minimum standards. The cost implications for security and antiterrorism are addressed as cost increases over conventional construction for common construction types. The changes in construction represented by those cost increases are tabulated for reference, but they represent only representative construction that will meet the requirements of the design criteria. The manual also includes a means to assess the tradeoffs between cost and risk. The Security Engineering Facility Planning Manual is intended to be used by planners as well as security and antiterrorism personnel with support from planning team members.

Security Engineering Facility Design Manual. UFC 4-020-02 *Security Engineering Facility Design Manual* provides interdisciplinary design guidance for developing preliminary systems of protective measures to implement the design criteria established using UFC 4-020-01. Those protective measures include building and site elements, equipment, and the supporting manpower and procedures necessary to make them all work as a system. The information in UFC 4-020-02 is in sufficient detail to support concept level project development, and as such can provide a good basis for a more detailed design. The manual also provides a process for assessing the impact of protective measures on risk. The primary audience for the Security Engineering Facility Design Manual is the design team, but it can also be used by security and antiterrorism personnel.

Security Engineering Support Manuals. In addition to the standards, planning, and design UFC mentioned above, there is a series of additional UFC that provide detailed design guidance for developing final designs based on the preliminary designs developed using UFC 4-020-02. These support manuals

provide specialized, discipline specific design guidance. Some address specific tactics such as direct fire weapons, forced entry, or airborne contamination. Others address limited aspects of design such as resistance to progressive collapse or design of portions of buildings such as mailrooms. Still others address details of designs for specific protective measures such as vehicle barriers or fences. The Security Engineering Support Manuals are intended to be used by the design team during the development of final design packages.

CHAPTER 2

PROGRESSIVE COLLAPSE DESIGN REQUIREMENTS FOR NEW AND EXISTING CONSTRUCTION

For both new and existing structures, the Project Planning Team will develop and provide the design criteria, which will include the Level of Protection, as determined by UFC 4-020-01. This LOP is used to define the corresponding level of progressive collapse design for new and existing construction as detailed in Section 2-1. Additional design requirements common to all construction types and all Levels of Protection are given in Section 2-2.

Chapter 3 "Design Strategies" provides the general requirements for applying the Tie Forces (TF) and Alternate Path (AP) approaches. The overall techniques for both the TF and AP approaches are the same for each construction type, but the details vary with material type. Chapters 4 through 8 provide the material specific design requirements. Finally, Appendix B provides insight into the development of these approaches.

2-1 DESIGN REQUIREMENTS FOR NEW AND EXISTING CONSTRUCTION.

The details of the design requirements for each LOP for new and existing construction are provided in the following sub-paragraphs.

2-1.1 Very Low Level of Protection Design Requirement.

A structure with Very Low Level of Protection must provide adequate horizontal tie force capacity. The magnitudes of the horizontal tie forces vary with construction type and with location in the structure, as specified in Chapters 4 through 8. The designer cannot use the Alternate Path method to verify that the structure can bridge over an element with inadequate capacity. If a structural element does not provide the required horizontal tie force capacity, it must be re-designed in the case of new construction or retrofitted in the case of existing construction. This procedure is illustrated in the flowchart in Figure 2-1.

2-1.2 Low Level of Protection Design Requirement.

The design of a structure with a Low Level of Protection must incorporate both horizontal and vertical tie force capacities. However, if a vertical structural member cannot provide the required vertical tie force capacity, the designer must either re-design the member or use the AP method to prove that the structure can bridge over the element when it is removed. For elements with inadequate horizontal tie force capacity, the Alternate Path method cannot be used. In this case, the designer must re-design the element in the case of new construction or retrofit the element in the case of existing construction. This procedure is illustrated in the flowchart in Figure 2-2. The magnitudes and locations of each tie force vary with construction type, as shown in Chapters 4 through 8.

Figure 2-1 Design Process for VLLOP in New and Existing Construction

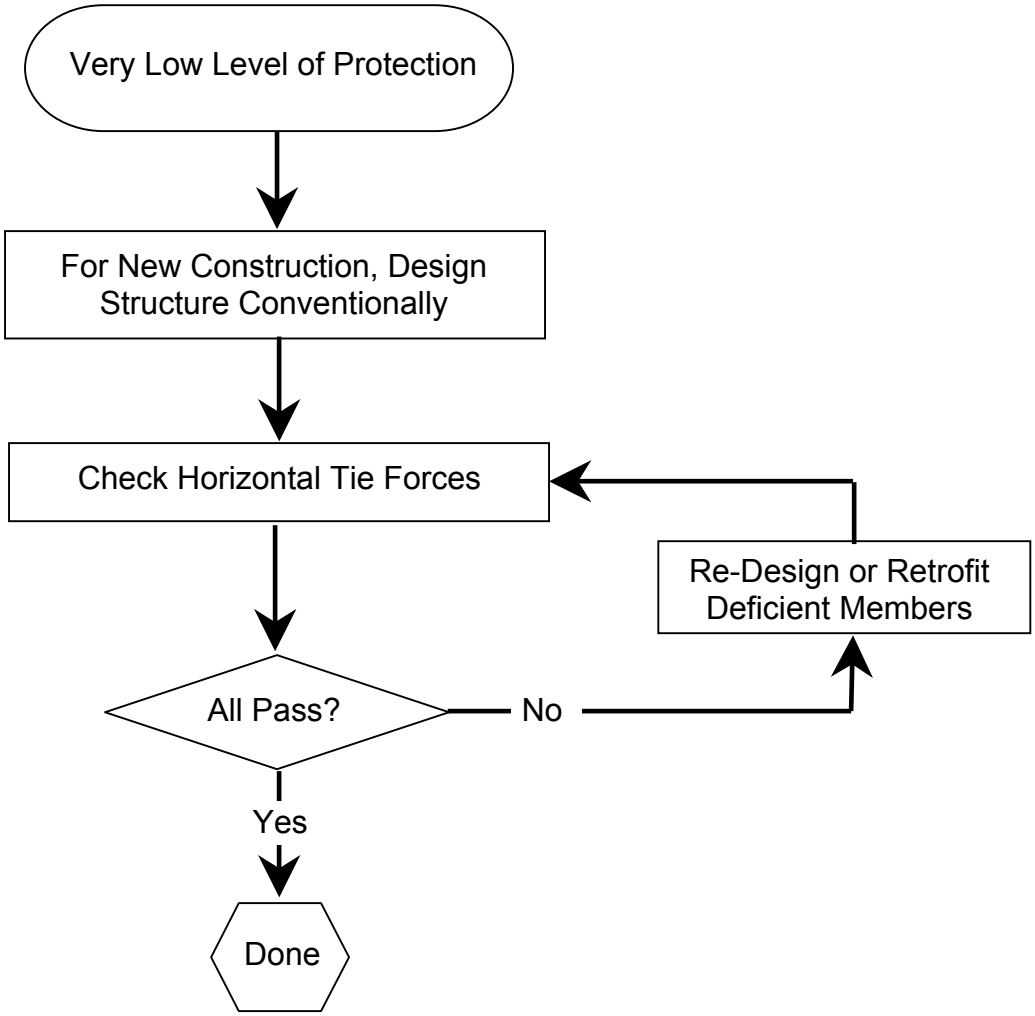

Figure 2-2 Design Process for LLOP in New and Existing Construction

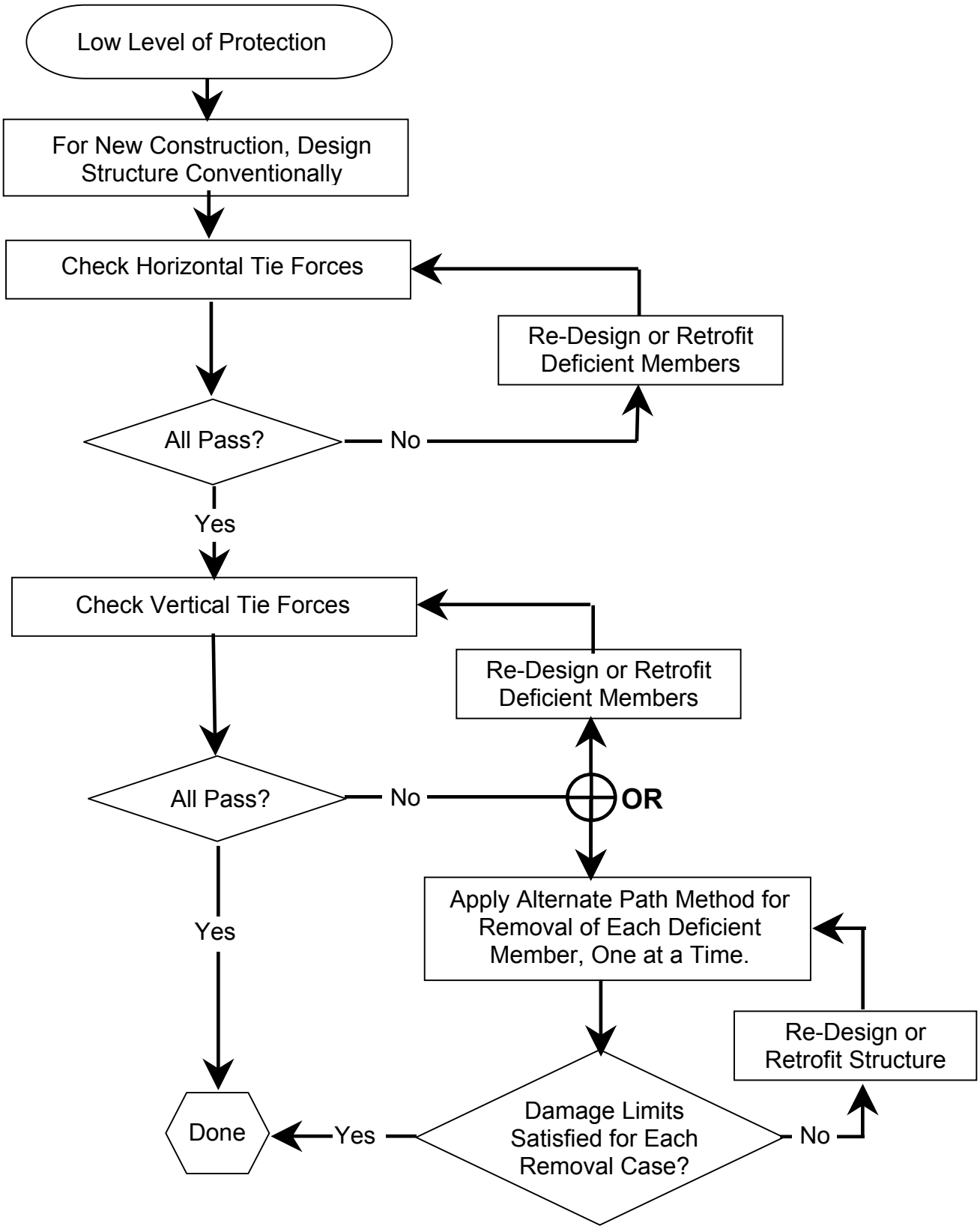

2-1.3 Medium and High Level of Protection Design Requirement.

For the purposes of this UFC, the Medium and High Levels of Protection are combined. Three requirements must be satisfied: tie forces, alternate path, and additional ductility requirements. The requirements are illustrated in the flowchart in Figure 2-3.

2-1.3.1 Tie Force Requirements for MLOP and HLOP.

For MLOP and HLOP structures, the designer must provide adequate horizontal and vertical tie force capacities. However, if a structural member cannot provide the required vertical tie force capacity, the designer must either re-design the member or use the Alternate Path method to prove that the structure can bridge over the element when it is removed. For elements with inadequate horizontal tie force capacity, the Alternate Path method cannot be used. In this case, the designer must re-design the element in the case of new construction or retrofit the element for existing construction.

2-1.3.2 Alternate Path Requirements for MLOP and HLOP.

The structure must be able to bridge over specific vertical load-bearing elements that are notionally removed from the structure. The plan locations of the removed vertical load-bearing elements include, as a minimum, the center of the short side, the center of the long side, and the building corner, as discussed in Section 3-2.3. In addition, vertical load-bearing elements are removed wherever there is a significant variation or discontinuity in the structural geometry, such as re-entrant corners and abrupt changes in bay sizes.

For each plan location of a removed element, an Alternate Path analysis is performed for every floor, one at a time; thus, if there are three plan locations and eight stories, twenty four AP analyses must be performed. If bridging cannot be demonstrated for one of the removed load-bearing elements, the structure must be re-designed or retrofitted to increase the bridging capacity. Note that the structural re-design or retrofit is not applied to just the deficient element, i.e., if a structure cannot be shown to bridge over a removed typical column at the center of the long side, the engineer must develop suitable or similar re-designs or retrofits for that column and other similar columns. For instance, a re-design might consist of additional positive moment rebar at a reinforced concrete beam-column joint; this new design must be applied to other columns on that external column line.

For MLOP and HLOP structures, the designer must perform and document a peer review for all Alternate Path analyses. The reviewer must be an independent organization with demonstrated experience performing progressive collapse design.

2-1.3.3 Additional Ductility Requirements for MLOP and HLOP.

Additional ductility requirements are required for perimeter vertical load-bearing elements as shown in Chapters 4 through 8.

Figure 2-3 Design Process for MLOP and HLOP in New and Existing Construction

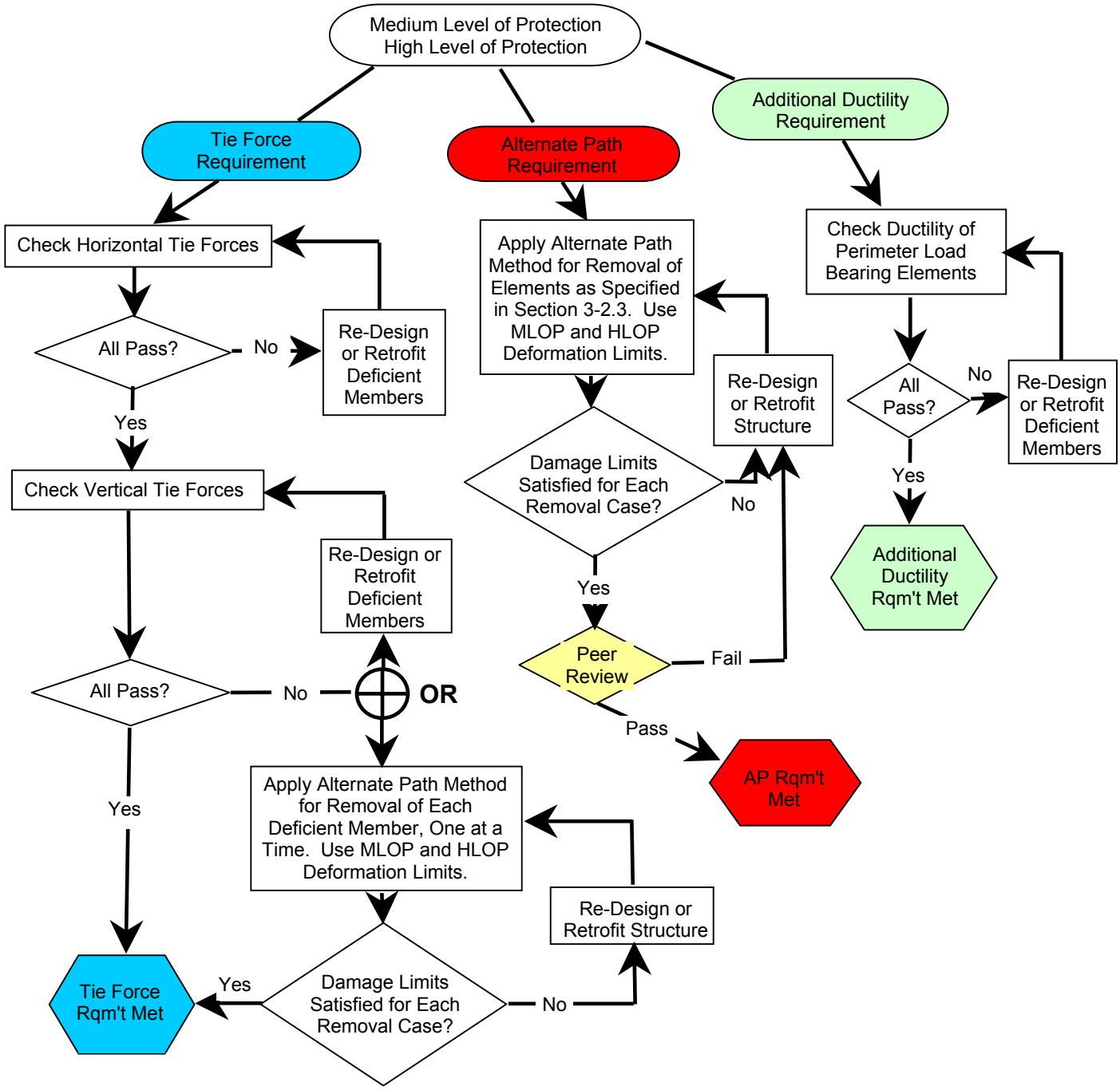

2-2 COMMON DESIGN REQUIREMENTS.

The following sections present design requirements that are common for all levels of protection (VLLOP through HLOP), for all new and existing construction.

2-2.1 Effective Column and Wall Height.

For all Levels of Protection, all multistory vertical load-carrying elements must be capable of supporting the vertical load after the loss of lateral support at any floor level (i.e., a laterally unsupported length equal to two stories must be used in the design or analysis). Use the load combination in Section 3-2.4.1 for the design or analysis. Use the appropriate strength reduction factors and over-strength factors as specified in Chapters 4 through 8.

2-2.2 Upward Loads on Floors and Slabs.

In each bay and at all floors and the roof, the slab/floor system must be able to withstand a net upward load of the following magnitude:

$$1.0\ D + 0.5\ L$$

where D = Dead load based on self-weight only (kN/m^2 or lb/ft^2)
L = Live load (kN/m^2 or lb/ft^2)

Note that this load is applied to each bay, one at a time, i.e., the uplift loads are not applied concurrently to all bays. Design the floor system in each bay and its connections to the beams, girders, columns, capitals, etc, to carry this load. A load path from the slab to the foundation for this upward load does not need to be defined. Use the appropriate strength reduction factors and over-strength factors as specified in Chapters 4 through 8.

CHAPTER 3

DESIGN STRATEGIES

The progressive collapse design requirements employ two design/analysis approaches: Tie Forces (TF) and Alternate Path (AP). This chapter discusses the general procedures for these approaches.

3-1 TIE FORCES.

In the Tie Force approach, the building is mechanically tied together, enhancing continuity, ductility, and development of alternate load paths. Tie forces are typically provided by the existing structural elements and connections that are designed using conventional design procedures to carry the standard loads imposed upon the structure.

Depending upon the construction type, there are several horizontal ties that must be provided: internal, peripheral, and ties to edge columns, corner columns, and walls. Vertical ties are required in columns and load-bearing walls. Figure 3-1 illustrates these ties for frame construction. Note that these "tie forces" are not synonymous with "reinforcement ties" as defined in the 2002 version of the *Building Code Requirements for Structural Concrete* from the American Concrete Institute (ACI 318-02) for reinforced concrete design.

The load path for peripheral ties must be continuous around the plan geometry and, for internal ties, the path must be continuous from one edge to the other. Along a particular load path, different structural elements may be used to provide the required tie strength, providing that they are adequately connected; for instance, an internal tie strength may be provided by a series of beams on a beam line, provided that the connections to the intermediate elements (girders, beams or columns) can provide the required tie strength. Likewise, vertical ties must be continuous from the lowest level to the highest level. Horizontal ties to edge columns and walls do not have to be continuous, but they must be satisfactorily anchored back into the structure. For buildings that are composed of separate sub-structures or that incorporate expansion joints that create structurally independent sections, the tie force requirements are applied to each sub-structure or independent section, which are treated as separate units. Note that all tie force paths must be geometrically straight; changes in direction to accommodate openings or similar discontinuities are not allowed.

3-1.1 Load and Resistance Factor Design for Tie Forces.

Following the Load and Resistance Factor Design (LRFD) approach, the design tie strength provided by a member or its connections to other members is taken as the product of the strength reduction factor, Φ, and the nominal tie strength R_n calculated in accordance with the requirements and assumptions of applicable material specific codes, including an over-strength factor, Ω, as applicable. (Note that for wood

construction, a time effect factor λ is also included). Per the LRFD approach, the design tie strength must be greater than or equal to the required tie strength:

$$\text{Design Tie Strength} = \Phi R_n \geq \text{Required Tie Strength} \qquad \text{Equation (3-1)}$$

where Φ = Strength reduction factor
R_n = Nominal Tie Strength calculated with the appropriate material specific code, including over-strength factor Ω where applicable.

For the purposes of this UFC, all strength reduction factors, Φ, are taken as the appropriate material specific code value.

3-1.2 Required Tie Strength.

The required tie strength for horizontal and vertical ties is defined for each material type in Chapters 4 through 8. The structural elements used as ties must not only provide sufficient tie strength, but they must also be adequately connected so that the tie forces can be distributed throughout the rest of the building.

The design tie strengths are considered separately from the forces that are typically carried by each structural element due to live load, dead load, wind load, etc.; in other words, the design tie strength of the element or connection with no other loads acting must be greater than or equal to the required tie strength.

Some of the tie forces are based on the dead and live loads. In some cases, a structure may have different loads, such as a corridor load or office load, on the same floor. In such cases, use an averaged dead or live load, by computing the total force acting on the floor and dividing by the total plan area. When tie forces are based on a span L that varies along the length of a tie, the largest span in a continuous tie should be used for the tie force calculation.

3-1.3 Structural Elements and Connections With Inadequate Design Tie Strength.

If all of the structural elements and connections can be shown to provide the required tie strength, then the tie force requirement has been met. If the **vertical** design tie strength of any structural element or connection is less than the **vertical** required tie strength, the designer must either: 1) revise the design to meet the tie force requirements or 2) use the Alternate Path method to prove that the structure is capable of bridging over this deficient element. **Note that the AP method is not applied to structural elements or connections that cannot provide the *horizontal* required tie strength; in this case, the designer must redesign or retrofit the element and connection such that a sufficient design tie strength is developed.**

Figure 3-1 Schematic of Tie Forces in a Frame Structure

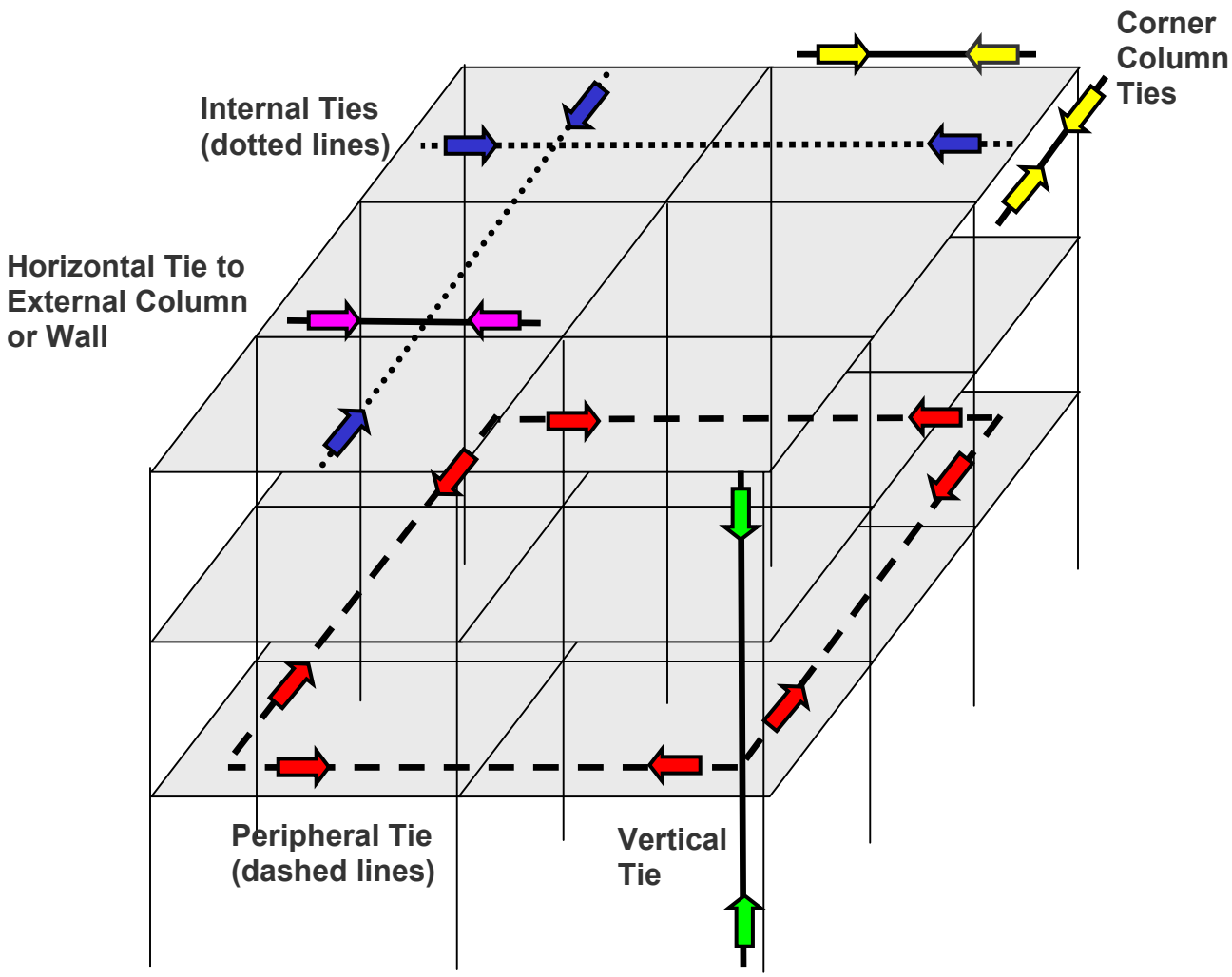

Note: The required External Column, External Wall, and Corner Column tie forces may be provided partly or wholly by the same elements that are used to meet the Peripheral or Internal tie requirement.

3-2 ALTERNATE PATH METHOD.

The Alternate Path method is used in two situations: 1) when a vertical structural element cannot provide the required tie strength, the designer may use the AP method to determine if the structure can bridge over the deficient element after it has been notionally removed, and 2) for structures that require Medium or High Levels of Protection, the AP method must be applied for the removal of specific vertical load-bearing elements which are prescribed in Section 3-2.3.

For MLOP and HLOP structures, perform and document a peer review for all Alternate Path analyses. The peer reviewers must be independent and qualified organizations who are approved beforehand by the building owner.

3-2.1 General.

This method follows the LRFD philosophy (ASCE 7-02) by employing load factor combinations for extreme loading and resistance factors to define design strengths.

It is recommended that 3-dimensional models be used to account for 3-dimensional effects and to avoid overly conservative solutions. However, 2-dimensional models may be used provided that the general response and 3-dimensional effects can be adequately idealized.

There are three allowable analysis procedures: Linear Static, Nonlinear Static, and Nonlinear Dynamic. These methods are summarized here and described in detail in Sections 3-2.8 through 3-2.10.

- Linear Static. The geometric formulation is based on small deformations and the material is treated as linear elastic, with the exception of discrete hinges that may be inserted, as described in Sections 3-2.7 and 3-2.8. The full load is applied at one time to the structure, from which a vertical load-bearing element has been removed.

- Nonlinear Static: Both the material and geometry are treated as nonlinear. A load history from zero load to the full factored load is applied to the structure with a removed vertical load-bearing element.

- Nonlinear Dynamic: The material and geometry are treated as nonlinear. A dynamic analysis is performed by instantaneously removing a vertical load-bearing element from the fully loaded structure and analyzing the resulting motion.

3-2.2 Load and Resistance Factor Design for Alternate Path Method.

Following the LRFD approach, the Design Strength provided by a member and its connections to other members in terms of flexure, axial load, shear and torsion is taken as the product of the strength reduction factor Φ and the nominal strength R_n calculated in accordance with the requirements and assumptions of applicable material specific codes, including the application of a material over-strength factor Ω as appropriate. Note that for wood construction, a time effect factor λ is also included; see Section 7.1.

$$\text{Design Strength} = \Phi R_n \geq \text{Required Strength} \qquad \text{Equation (3-2)}$$

where Φ = Strength reduction factor
R_n = Nominal strength, calculated with the appropriate material specific code, including over-strength factors Ω where applicable.

Per the LRFD approach, the Design Strength must be greater than the Required Strength which is the internal force created by the factored loads.

For the purposes of this UFC, all strength reduction factors Φ are taken from the material specific design code, as defined in Chapters 4 through 8.

3-2.3 Removal of Load-Bearing Elements for the Alternate Path Method.

Load-bearing elements are removed from the AP model in two cases: 1) in structures with elements that cannot provide the vertical required tie strength, the deficient element must be removed, and 2) for MLOP and HLOP structures, the location and size of the removed element are specified to verify that the structure has adequate flexural resistance to bridge over the missing element. The details of the type, location, and size of the removed load-bearing elements are described in the following sub-paragraphs.

3-2.3.1 Structures With Deficient Vertical Tie Force Capacity.

The definition of the size and type of load-bearing element that must be removed is dependent upon the construction material and is presented in each of the material-specific chapters (Chapters 4 to 8).

3-2.3.2 MLOP and HLOP Framed and Flat Plate Structures.

For structures with Medium and High Levels of Protection, multiple AP analyses are performed, with the load-bearing elements removed from the plan locations specified in the following sub-sections.

3-2.3.2.1 External Column Removal.

As a minimum, remove external columns near the middle of the short side, near the middle of the long side, and at the corner of the building, as shown in Figure 3-2. Also remove columns at locations where the plan geometry of the structure changes significantly, such as abrupt decrease in bay size or re-entrant corners, or, at locations where adjacent columns are lightly loaded, the bays have different tributary sizes, and members frame in at different orientations or elevations. Use engineering judgment to recognize these critical column locations.

For each plan location defined for element removal, perform AP analyses for each floor, one at a time. For example, if a corner column is specified as the removed element location, one AP analysis is performed for removal of the ground floor corner column; another AP analysis is performed for the removal of the first floor corner column; another AP analysis is performed for the second floor corner column, and so on. If the designer can show that similar structural response is expected for column removal on multiple floors (say, floors 4 though 10), the analysis for these floors can be omitted but the designer must document the justification for not performing these analyses.

3-2.3.2.2 Internal Column Removal

For structures with underground parking or other uncontrolled public ground floor areas, remove internal columns near the middle of the short side, near the middle of the long side and at the corner of the uncontrolled space, as shown in Figure 3-3. The removed column extends from the floor of the underground parking area or uncontrolled public ground floor area to the next floor (i.e., a one story height must be removed). Internal columns must also be removed at other critical locations within the uncontrolled public access area, as determined with engineering judgment. For each plan location, the AP analysis is only performed for the column on the ground floor or parking area floor and not for all stories in the structure.

3-2.3.2.3 Continuity Across Horizontal Elements

For both external and internal column removal, continuity must be retained across the horizontal elements that connect to the ends of the column; see Figure 3-4.

Figure 3-2 Location of External Column Removal for MLOP and HLOP Structures

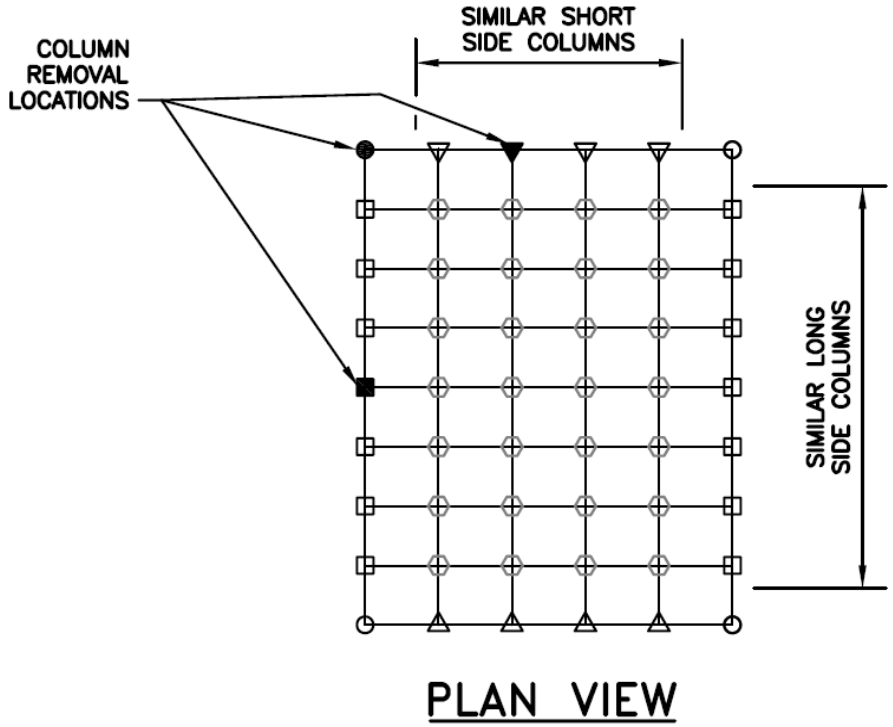

Figure 3-3 Location of Internal Column Removal for MLOP and HLOP Structures

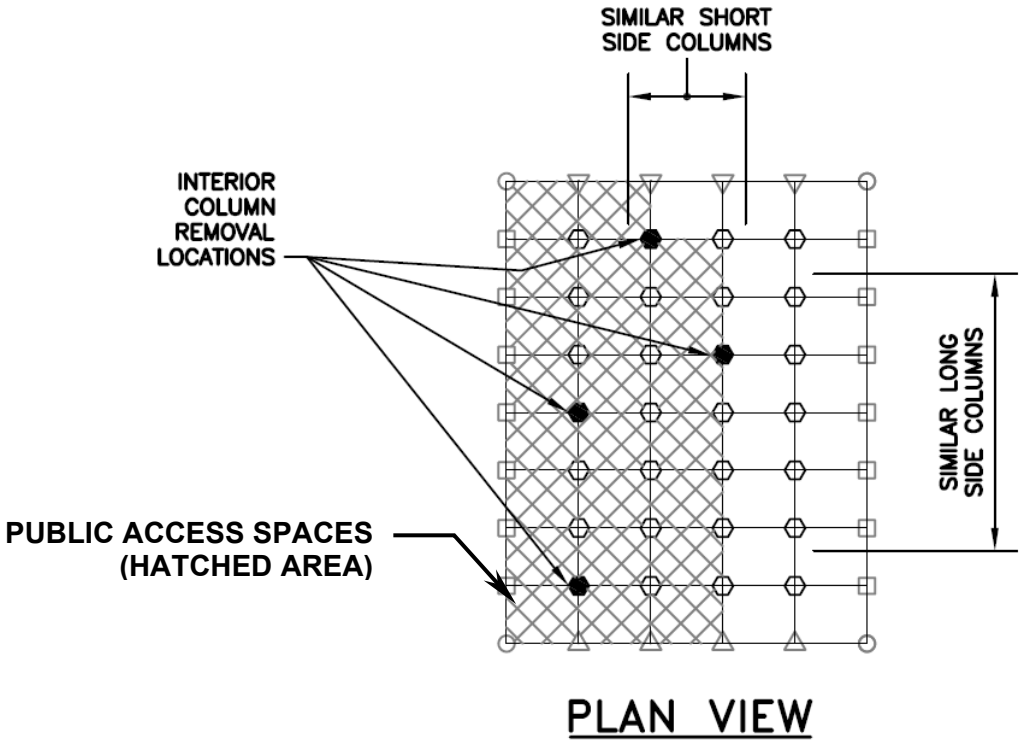

Figure 3-4 Removal of Column From Alternate Path Model

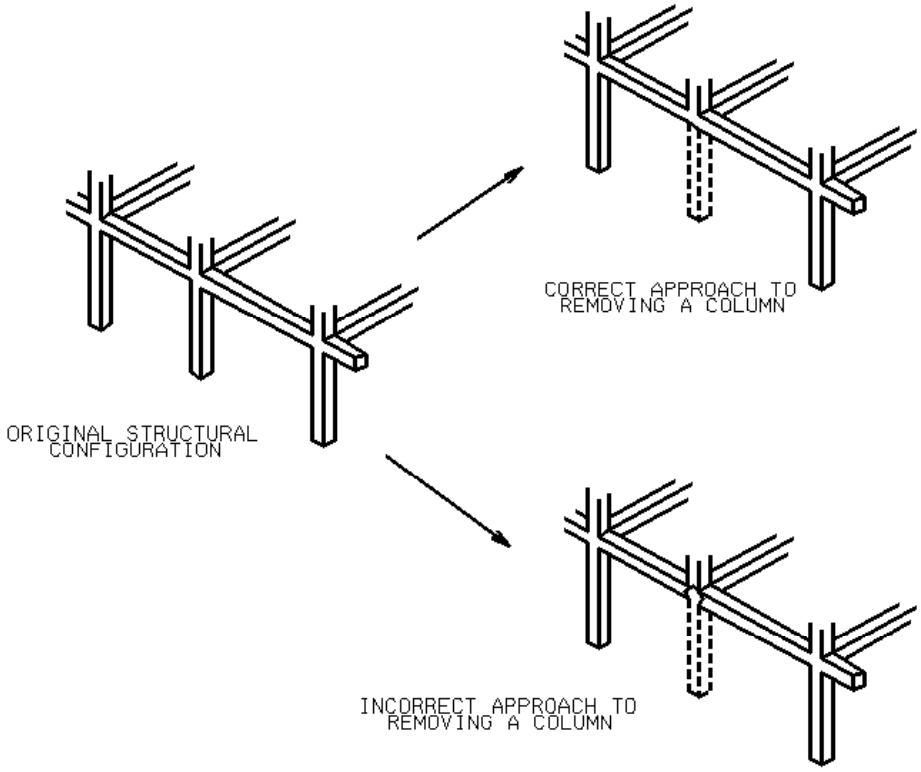

3-2.3.3 MLOP and HLOP Load-Bearing Wall Structures.

3-2.3.3.1 External Load-Bearing Walls.

As a minimum, remove external load-bearing walls near the middle of the short side, near the middle of the long side and at the corner of the building, as shown in Figure 3-5. Also remove load-bearing walls at locations where the plan geometry of the structure changes significantly, such as at an abrupt decrease in bay size or at re-entrant corners, as well as at locations where adjacent walls are lightly loaded, the bays have different sizes, and members frame in at different orientations or elevations. Use engineering judgment to recognize these critical locations. The length of the removed wall section is specified in Section 3-2.3.3.3. The designer must use engineering judgment to shift the location of the removed wall section by a maximum of the wall height if that creates a worse case scenario.

For each plan location defined for element removal, perform AP analyses for each floor, one at a time. For example, if a wall section on the short side is specified as the removed element location, an AP analysis is performed for removal of the ground floor wall section; another AP analysis is performed for the removal of the first floor wall section and another for the second floor wall section, and so on. If the designer can show that similar structural response is expected for wall removal on multiple floors (say, floors 3 though 5), the analysis for these floors can be omitted but the designer must document the justification for not performing these analyses.

3-2.3.3.2 Internal Load-Bearing Walls.

For structures with underground parking or uncontrolled public ground floor areas, remove internal load-bearing walls near the middle of the short side, near the middle of the long side and at the corner of the uncontrolled space, as shown in Figure 3-6. The removed wall extends from the floor of the underground parking area or uncontrolled public ground floor area to the next floor (i.e., a one story height must be removed). Also remove internal load-bearing walls at other critical locations within the uncontrolled public access area, as determined with engineering judgment. For each plan location, the AP analyses are only performed for the load-bearing walls on the ground floor or parking area floor and not for all stories in the structure. The length of the removed wall section is specified in Section 3-2.3.3.3. The designer must use engineering judgment to shift the location of the removed wall section by a maximum of the wall height if that creates a worse case scenario.

3-2.3.3.3 Length of Removed Load-Bearing Walls.

For load-bearing walls on the sides of the building, remove a length of wall equal to two times the wall height but not less than the distance between expansion or control joints. For load-bearing walls at the corner, remove a length of wall equal to the wall height in each direction but not less than the distance between expansion or control joints. For the situation in which the external wall is not load-bearing but the intersecting internal wall is load-bearing, as shown in the bottom of Figure 3-5, remove a width of the load-bearing wall equal to the wall height.

Figure 3-5 Location of External Load-Bearing Wall Removal for MLOP and HLOP Structures

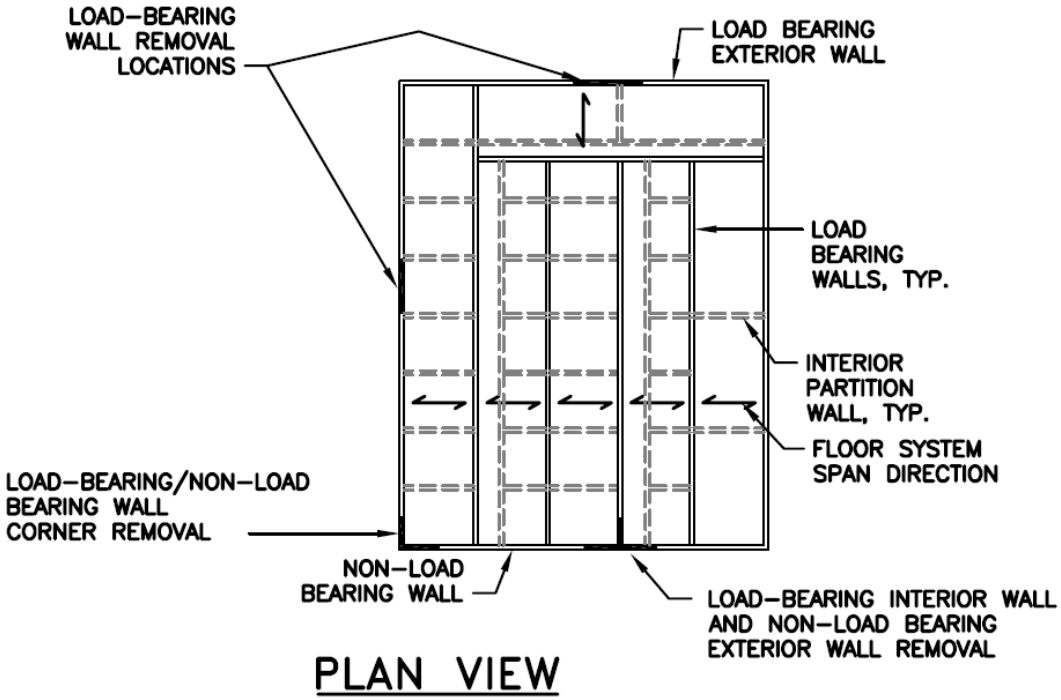

Figure 3-6 Location of Internal Load-Bearing Wall Removal for MLOP and HLOP Structures

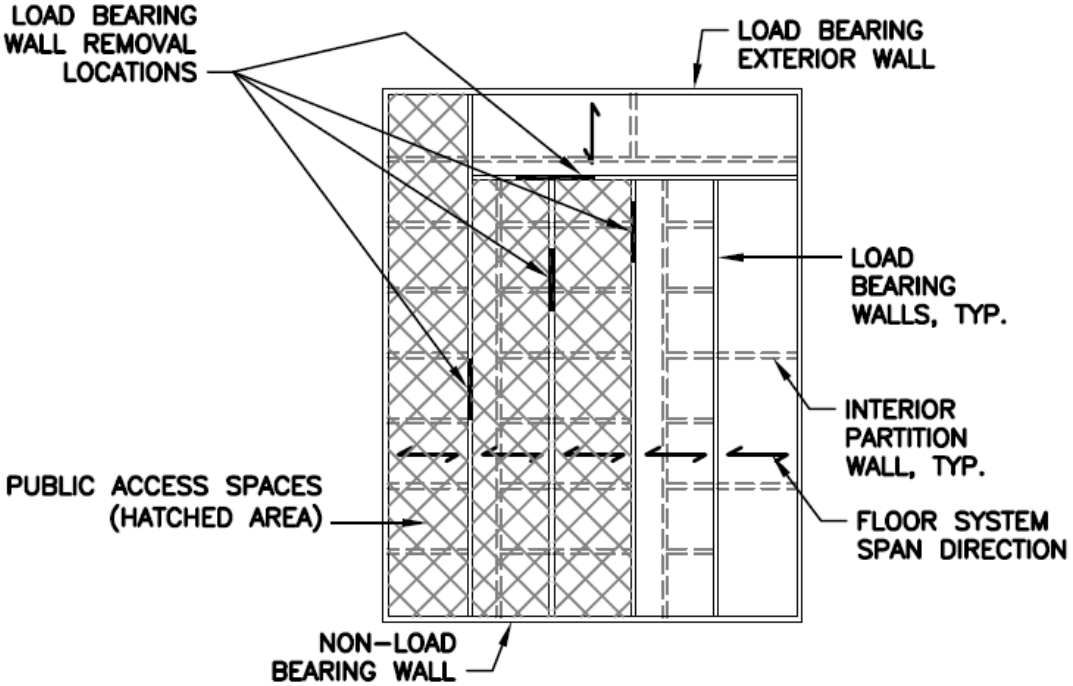

3-2.4 Factored Loads for Alternate Path Method.

3-2.4.1 Nonlinear Dynamic Analysis Load Case.

For Nonlinear Dynamic analyses of all construction types, apply the following factored load combinations to the entire structure:

(0.9 or 1.2) D + (0.5 L or 0.2 S) + 0.2 W

where D = Dead load (kN/m^2 or lb/ft^2)
L = Live load (kN/m^2 or lb/ft^2)
S = Snow load (kN/m^2 or lb/ft^2)
W = Wind load, as defined for the Main Wind Force-Resisting System in Section 6 of ASCE 7-02 (kN/m^2 or lb/ft^2)

3-2.4.2 Linear and Nonlinear Static Analysis Load Case.

For Linear and Nonlinear Static analyses of all construction types, apply the following amplified factored load combination to those bays immediately adjacent to the removed element and at all floors above the removed element; see Figures 3-7 and 3-8.

$$2.0\ [\ (0.9 \text{ or } 1.2)\ D + (0.5\ L \text{ or } 0.2\ S)\ ] + 0.2\ W$$

For the rest of the structure, apply the load combination in Section 3-2.4.1.

For load-bearing wall systems, the adjacent bay is defined as the plan area that spans between the removed wall and the nearest load-bearing walls.

3-2.4.3 Loads Associated with Failed Elements.

As discussed later, the internal forces or deformation in a structural element or connection may be shown to exceed the acceptability criteria. If so, the element is considered to be failed and is removed from the model.

For a Nonlinear Dynamic analysis, double the loads from the failed element to account for impact and apply them instantaneously to the section of the structure directly below the failed element, before the analysis continues. Apply the loads from the area supported by the failed element to an area equal to or smaller than the area from which they originated.

For a Linear or Nonlinear Static analysis, if the loads on the failed element are already doubled as shown in Section 3-2.4.2, then the loads from the failed element are applied to the section of the structure directly below the failed element, before the analysis is re-run or continued. If the loads on the failed element are not doubled, then double them and apply them to the section of the structure directly below the failed element, before the analysis is re-run or continued. In both cases, apply the loads from the area supported by the failed element to an area equal to or smaller than the area from which they originated.

3-2.5 Material Properties.

Material properties, such as yield stress, failure stress, etc, must be taken in accordance with the requirements of the appropriate material specific code. For some construction types, an over-strength factor Ω or time effect factor λ is permitted, to account for the typical over-strengths expected for that material. The appropriate factors to increase the nominal strength for each material are given in Chapters 4 through 8.

Figure 3-7. Examples of Linear and Nonlinear Static Load Locations for External and Internal Column Removal (Left Side Demonstrates External Column Removal; Right Side Shows Internal Column Removal)

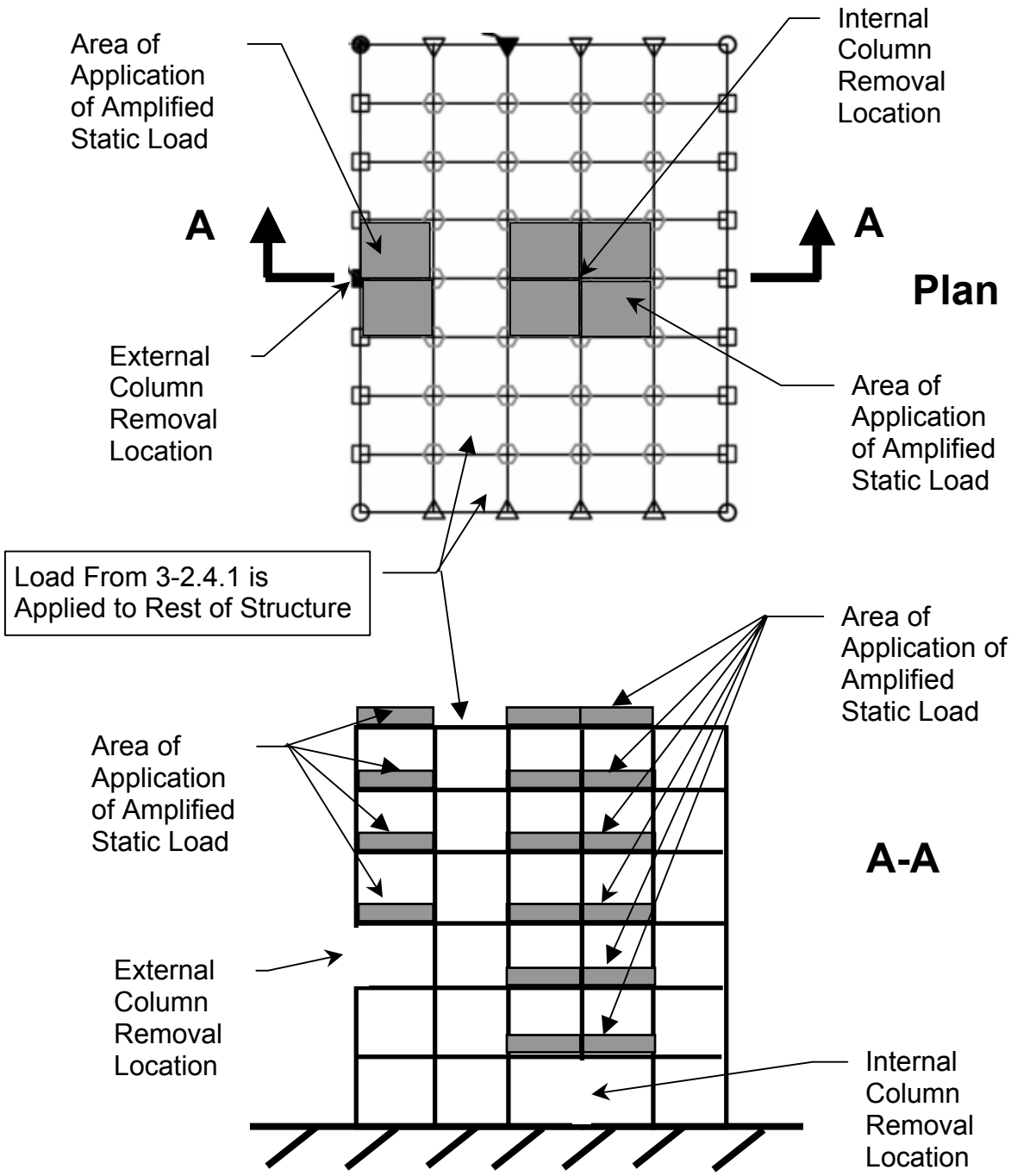

Figure 3-8. Examples of Linear and Nonlinear Static Load Locations for External and Internal Load-Bearing Wall Removal (Left Side Demonstrates External Column Removal; Right Side Shows Internal Column Removal)

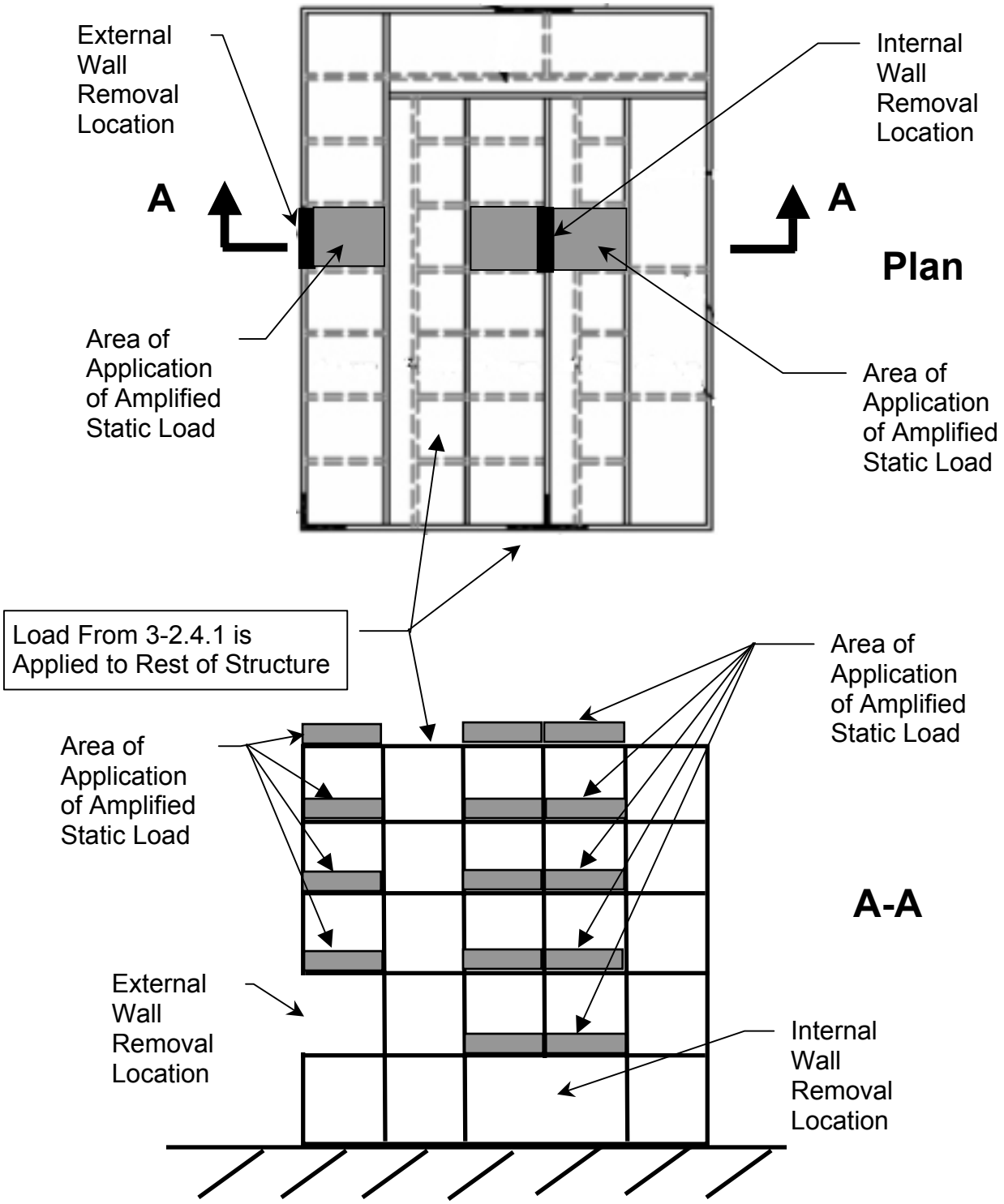

3-2.6 Damage Limits for the Structure.

In AP analysis with any of the three methods (Linear Static, Nonlinear Static, and Nonlinear Dynamic), the designer must quantify the extent of damage during the analysis and at the end of the analysis.

3-2.6.1 Damage Limits for Removal of External Column or Load-Bearing Wall

For the removal of a wall or column on the external envelope of a building t, the Damage Limits require that the collapsed area of the floor directly above the removed element must be less than the smaller of 70 m^2 (750 ft^2) or 15% of the total area of that floor and the floor directly beneath the removed element should not fail. In addition, any collapse must not extend beyond the structure tributary to the removed element.

3-2.6.2 Damage Limits for Removal of Internal Column or Load-Bearing Wall

For the removal of an internal wall or column of a building, the Damage Limits require that the collapsed area of the floor directly above the removed element must be less than the smaller of 140 m^2 (1500 ft^2) or 30% of the total area of that floor, and the floor directly beneath the removed element should not fail. In addition, any collapse must not extend beyond the bays immediately adjacent to the removed element.

3-2.7 Acceptability Criteria for Structural Elements and Connections.

The Acceptability Criteria for the AP method consist of strength requirements and deformation limits. The moments, axial forces, and shears that are calculated for the elements and connections in each AP analysis are the Required Strengths, as defined in Equation 3-2. These Required Strengths must be compared to the Design Strengths of each element and connection, as shown generically in Table 3-1. In addition, the deflection and rotations that are calculated in the AP model must be compared against the deformation limits that are specific to each material type. If any structural element or connection violates an acceptability criteria (strength or deformation), modifications must be made to the model before it is re-analyzed, as indicated in Table 3-1 and discussed in more detail in the following sub-sections.

3-2.7.1 Flexure.

The acceptability criteria for flexural loads is based on the flexural design strength of the structural element, including the strength reduction factor Φ, and the over-strength factor Ω applied to the material properties as appropriate. In calculating the flexural design strength, account for the material-specific factors that can reduce the flexural design strength, such as compactness and lateral bracing for structural steel, amount of rebar in reinforced concrete, etc.

When the internal moment (flexural required strength) determined by the AP model exceeds the flexural design strength of an element, the element is either

removed or modified. For Linear Static models, structural elements that can sustain a constant moment while undergoing continued deformation must be modified through insertion of an effective plastic hinge. Place a discrete hinge in the model at the location of yielding and apply two constant moments, one at each side of the discrete hinge, in the appropriate direction for the acting moment; see Figure 3-9. Determine the location of the effective plastic hinge through engineering analysis and judgment or with the guidance provided for the particular construction type. In Nonlinear Static and Dynamic models, the software must have the ability to adequately represent the nonlinear flexural response, after the internal moment reaches the flexural design strength of the element.

For structural elements that fail when the peak moment is reached and in all three model types (Linear Static, Nonlinear Static and Nonlinear Dynamic), remove the element when the internal moment exceeds the flexural design strength. Redistribute the loads associated with the failed element per Section 3-2.4.3, before the analysis continues.

Figure 3-9 Inserting Hinge and Moments into Linear Static Alternate Path Model

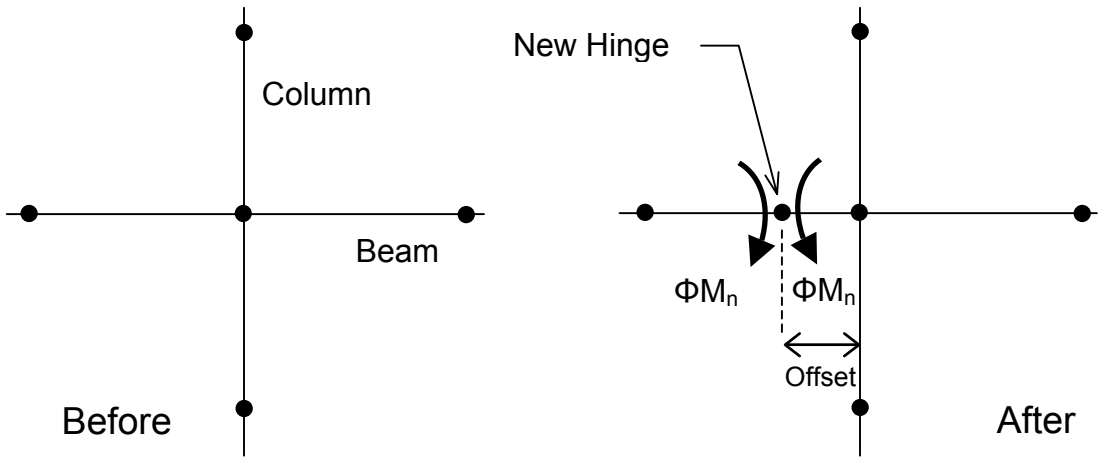

Table 3-1 Acceptability Criteria for Elements and Connections and Subsequent Action for AP Model

Structural Behavior	Acceptability Criteria	Subsequent Action for Violation of Criteria
Element Flexure	Flexural Design Strength[A] (based on compactness, bracing, amount and type of reinforcing steel, etc)	For elements that can carry moment after the peak moment is reached: In Linear Static analysis, insert an effective plastic hinge at appropriate location and apply a constant moment on both sides of the hinge (Figure 3-9). For Nonlinear Static and Dynamic analysis, the model and software must automatically incorporate nonlinear flexural response. For elements that fail upon reaching the flexural design strength, remove the failed element from model and redistribute the loads per Section 3-2.4.3.
Element Combined Axial and Flexure	Interaction Equations Using Axial and Flexural Design Strengths[A]	For elements that are controlled by flexure, follow the procedure outlined in Section 3-2.7.1. For elements controlled by buckling, remove the failed element from model and redistribute the loads per Section 3-2.4.3.
Element Shear	Shear Design Strength[A]	Remove failed element from model and redistribute the loads per Section 3-2.4.3.
Connections	Connection Design Strength[A]	Remove connection.
Deformation	Deformation Limits, defined for each material in Chapters 4 to 8.	Remove failed element from model and redistribute the loads per Section 3-2.4.3.

[A] Values are calculated using the appropriate material specific design code, including material over-strength factors Ω as appropriate, as discussed in Chapters 4 to 8.

3-2.7.2 Combined Axial and Flexure.

The acceptability criteria for elements undergoing combined axial loads and flexural loads is based on the provisions given in the material-specific design code. For elements that are controlled by flexure, follow the procedure outlined in Section 3-2.7.1. For elements controlled by buckling, remove the failed element from the model and redistribute the loads per Section 3-2.4.3.

3-2.7.3 Shear.

If the shear design strength is exceeded for any construction type, remove the member and redistribute the loads from that element per Section 3-2.4.3, before the analysis continues.

3-2.7.4 Connections.

If the design strength for any connection failure mode is exceeded, remove the connection. If the connections at both ends of an element have failed, remove the element and redistribute the loads from that element per Section 3-2.4.3, before the analysis continues.

Use the guidance provided in the material-specific design codes or other sources to develop connection details that can provide the required strength while undergoing potentially large deformations. In a number of the material-specific design codes, provisions for seismic design are presented, including connection details; incorporate this information, as appropriate, in designing connections.

3-2.7.5 Deformation Limits.

Deformation limits are defined in terms of the deflections and rotations in the structural elements, connections and frame. Excessive deflections or rotations imply that the element or portion of the frame has deformed to the point that it can no longer carry load. Calculation of rotations for members, connections, and frames is illustrated in Figures 3-10 and 3-11.

If an element or connection exceeds a deformation limit, remove it from the model. The values for the deformation limits are specific to each type of construction and are listed in the appropriate sections (Chapters 4 to 8).

Figure 3-10 Measurement of Hinge Rotation θ After Formation of Plastic Hinges

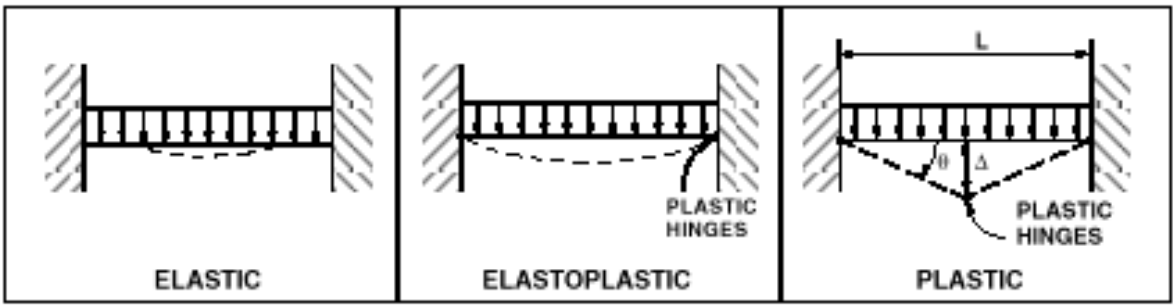

Figure 3-11 Sidesway and Member End Rotations (θ) for Frames

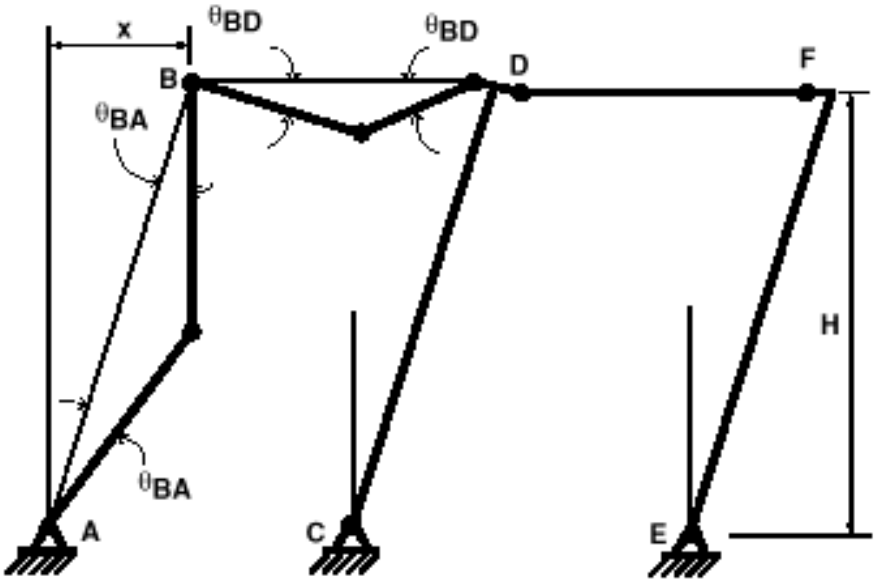

3-2.8 Linear Static Analysis Procedure.

Perform the following steps in a Linear Static Analysis. Note that a second order or P-Δ analysis is required.

1. For AP analyses for load-bearing elements that do not have adequate vertical tie force capacity, remove the element from the structural model in accordance with the material-specific requirements given in Chapters 4 to 8 (see Section 3-2.3.1). For AP analyses of MLOP and HLOP structures, remove the column or load-bearing wall per Sections 3-2.3.2 and 3-2.3.3.

2. Apply the loads defined in Section 3-2.4.2.

3. After the analysis is performed, compare the predicted element and connection forces and deformations against the acceptability criteria that are shown generically in Table 3-1. To demonstrate compliance with the acceptability criteria, a software package with modules that perform building code checks may be used, providing the modules can be tailored to check the criteria in Table 3-1. Confirm that all material-specific code provisions for bracing, compactness, flexural-axial interaction, etc, are met.

4. If none of the structural elements or connections violates the acceptability criteria, the analysis is complete and satisfactory resistance to progressive collapse has been demonstrated. If any of the structural elements or connections violate the acceptability criteria, perform the following procedure:

    A. Modify the geometry or material properties of the model, per Table 3-1 (i.e., remove elements and/or insert hinges and constant moments).
    B. If an element was shown to fail, redistribute the element's loads per Section 3-2.4.3.
    C. Re-analyze this modified model and applied loading, starting from the unloaded/undeformed condition.
    D. At the end of the re-analysis, assess the resulting damaged state and compare with the damage limits in Section 3-2.6. If the damage limits are violated, re-design and re-analyze the structure, starting with Step 1. If the damage limits are not violated, compare the resulting internal forces and deformation of each element and connection with the acceptability criteria
    E. If any of the acceptability criteria are violated in the new analysis, repeat this process (Steps A through E), until the damage limits are violated or there are no more violations of the acceptability criteria. If the damage limits are violated, re-design and reanalyze the structure, starting with Step 1. If the damage limits are not violated and no new elements failed the acceptability criteria, then the design is adequate.

3-2.9 Nonlinear Static Analysis Procedure.

Perform the following steps in a Nonlinear Static Analysis.

1. For AP analyses for load-bearing elements that do not have adequate vertical tie force capacity, remove the element from the structural model in accordance with the material-specific requirements given in Chapters 4 to 8 (see Section 3-2.3.1). For AP analyses of MLOP and HLOP structures, remove the column or load- bearing wall per Sections 3-2.3.2 and 3-2.3.3.

2. Apply the loads using a load history that starts at zero and is increased to the final values defined in Section 3-2.4.2. Apply at least 10 load steps to reach the total load. The software must be capable of incrementally increasing the load and iteratively reaching convergence before proceeding to the next load increment.

3. As the analysis is performed, compare the predicted element and connection forces and deformations against the acceptability criteria that are shown generically in Table 3-1. To demonstrate compliance with the acceptability criteria, a software package with modules that perform building code checks may be used, providing the modules can be tailored to check the criteria in Table 3-1. Confirm that all material-specific code provisions for bracing, compactness, flexural-axial interaction, etc, are met.

4. If none of the structural elements or connections violates the acceptability criteria during the loading process, the analysis is complete and satisfactory resistance to progressive collapse has been demonstrated. If any of the structural elements or connections violate the acceptability criteria, perform the following procedure:

   A. At the point in the load history when the element or connection fails the acceptability criteria, remove the element or connection, per Table 3-1.
   B. If an element was shown to fail, redistribute the element's loads per Section 3-2.4.3.
   C. Restart the analysis from the point in the load history at which the element or connection failed and the model was modified. Increase the load until the maximum load is reached or until another element or connection violates the acceptability criteria.
   D. At each point at which the analysis is halted, check the predicted damage state against the damage limits in Section 3-2.6. If the damage limits are violated, re-design and re-analyze the structure, starting with Step 1.
   E. If the damage limits are not violated and the total load has been applied, the design is adequate. If the damage limits are not violated but one of the acceptability criteria was violated in the re-started analysis, repeat this process (Steps A through E), until the total load is applied or the damage limits are violated.

3-2.10 Nonlinear Dynamic Analysis Procedure.

Perform the following steps in a Nonlinear Dynamic Analysis.

1. Distribute the mass of the structure throughout the model in a realistic manner; lumped masses are not allowed, unless to represent mechanical equipment, pumps, architectural features, and similar items. Distribute mass along beams and column as mass per unit length; for slabs and floors, represent the mass as mass per unit area. If any portion of the structure is represented by solid elements, distribute the mass as mass per unit volume.

2. Prior to the removal of the load-bearing element, bring the model to static equilibrium under the loads from Section 3-2.4.1; the process for reaching equilibrium under gravity loads will vary with analysis technique.

3. With the model stabilized, remove the appropriate load-bearing element instantaneously. For AP analyses for load-bearing elements that do not have adequate vertical tie force capacity, remove the element in accordance with the material-specific requirements given in Chapters 4 to 8 (see Section 3-2.3.1). For AP analyses of MLOP and HLOP structures, remove the column or load-bearing wall per Sections 3-2.3.2 and 3-2.3.3.

4. Continue the dynamic analysis until the structure reaches a steady and stable condition (i.e., the displacement history of the model reaches a near constant value, with very small oscillations and all material and geometric nonlinear processes have halted).

5. During or after the analysis, compare the predicted element and connection forces and deformations against the acceptability criteria that are shown generically in Table 3-1. To demonstrate compliance with the acceptability criteria, a software package with modules that perform building code checks may be used, providing the modules can be tailored to check the criteria in Table 3-1. Confirm that all material-specific code provisions for bracing, compactness, flexural-axial interaction, etc, are met.

6. If none of the structural elements or connections violates the acceptability criteria during the dynamic motion of the structure, the analysis is complete and satisfactory resistance to progressive collapse has been demonstrated. If any of the structural elements or connections violate the acceptability criteria, perform the following procedure:

   A. At the point in the load history when the element or connection fails the acceptability criteria, instantaneously remove the element or connection from the model, per Table 3-1.

B. If an element was shown to fail, redistribute the element's loads per Section 3-2.4.3.
C. Restart the analysis from the point in the load history at which the element or connection failed and the model was modified. Continue the analysis until the structural model stabilizes or until another element or connection violates the acceptability criteria.
D. For each time at which the analysis is halted due to violation of an element acceptability criteria, check the damage limits. If the damage limits are violated, stop the analysis and re-design and re-analyze the structure, starting with Step 1.
E. If the damage limits are not violated and the structural model stabilizes, the design is adequate. If the damage limits are not violated but one of the acceptability criteria was violated in the re-started analysis, repeat this process (Steps A through E) until the structure reaches a stable condition or the damage limits are violated.

CHAPTER 4

REINFORCED CONCRETE DESIGN REQUIREMENTS

This chapter provides the specific requirements for designing a reinforced concrete building to resist progressive collapse. Appendix C demonstrates the application of the reinforced concrete design requirements for a 5-story office building.

For composite construction, such as concrete deck slabs on steel beams, sheet steel decking with an integral slab, and columns reinforced with structural steel shapes, the application of both the requirements of this chapter and those provided for steel in Chapter 5 are required. For example, for a concrete deck slab on steel beam in which the slab is used to provide internal tie capacity, the floor system and roof system would be required to meet the internal tie requirements of this section, while the steel frame would be required to meet the other tie requirements (vertical, peripheral, and external column) and the AP requirements of Chapter 5.

4-1 MATERIAL PROPERTIES FOR REINFORCED CONCRETE.

Apply the appropriate over-strength factors to the calculation of the design strengths for both Tie Forces and the Alternate Path method. Over-strength factors are given in Table 4-1.

Table 4-1 Over-Strength Factors for Reinforced Concrete

Reinforced Concrete	Over-Strength Factor, Ω
Concrete Compressive Strength	1.25
Reinforcing Steel (ultimate and yield strength)	1.25

4-2 REINFORCED CONCRETE TIE FORCE REQUIREMENTS.

4-2.1 General.

Design reinforced concrete structures with peripheral, internal, vertical, and horizontal ties to columns and walls, as applicable. See Figure 3-1 for a schematic showing these ties. The external column, external wall, and corner column design tie strengths may be provided partly or wholly by the same reinforcement that is used to meet the internal or peripheral tie requirements. The paths of all ties must be straight; no changes in direction are allowed.

4-2.2 Strength Reduction Factor Φ for Reinforced Concrete Tie Forces

The strength reduction factor Φ for properly anchored, embedded, or spliced steel reinforcement in tension is 0.75 (based on Section 9.3.2.6 of ACI 318-02 for strut-and-tie models).

4-2.3 Proportioning of Ties.

Reinforcement that is provided for other purposes, such as flexure or shear, may be regarded as forming part or whole of the required ties.

4-2.4 Continuity and Anchorage of Ties.

Splices in longitudinal steel reinforcement used to provide the design tie strength must be lapped, welded or mechanically joined with Type 1 or Type 2 mechanical splices, per ACI 318-02. Locate splices away from joints or regions of high stress and should be staggered.

Use seismic hooks, as defined in Chapter 21 of ACI 318-02, and seismic development lengths, as specified in Section 21.5.4 of ACI 318-02, to anchor ties to other ties. At re-entrant corners or at substantial changes in construction, take care to insure that the ties are adequately developed.

4-2.5 Internal Ties.

Distribute the internal ties are distributed at each floor and roof level in two directions approximately at right angles. As shown in Figure 3-1, they must be straight and made continuous from one edge of the floor or roof to the far edge of the floor or roof, using lap splices, welds or mechanical splices. The internal ties must be anchored to peripheral ties at each end (unless continuing as horizontal ties to columns or walls). They may, in whole or in part, be spread evenly in the slabs or may be grouped at or in beams, walls or other appropriate positions. Spacings must not be greater than 1.5 l_r, where l_r is the greater of the distances between the centers of the columns, frames, or walls supporting any two adjacent floor spaces in the direction of the tie under consideration . In walls, they must be within 0.5 m (1.6 ft) of the top or bottom of the floor slabs.

In SI units and in each direction, internal ties must have a required tie strength (in kN/m width) equal to the greater of:

a) $\frac{(1.0D + 1.0L)}{7.5} \frac{l_r}{5} F_t$ (kN/m)

or

b) $1.0\ F_t$ (kN/m)

where: D = Dead Load (kN/m^2)

L = Live Load (kN/m^2)
l_r = Greater of the distances between the centers of the columns, frames or walls supporting any two adjacent floor spaces in the direction of the tie under consideration (m)
F_t = "Basic Strength" = Lesser of $(20 + 4\ n_o)$ or 60
n_o = Number of stories

In English units and in each direction, internal ties must have a required tie strength (in kip/ft width) equal to the greater of:

a) $$\frac{(1.0D + 1.0L)}{156.6} \frac{l_r}{16.4} \frac{1.0}{3.3} F_t \quad \text{(kip/ft)}$$

or

b) $$\frac{1.0}{3.3} F_t \quad \text{(kip/ft)}$$

where:
D = Dead Load (lb/ft^2)
L = Live Load (lb/ft^2)
l_r = Greater of the distances between the centers of the columns, frames or walls supporting any two adjacent floor spaces in the direction of the tie under consideration (ft)
F_t = "Basic Strength" = Lesser of $(4.5 + 0.9\ n_o)$ or 13.5
n_o = Number of stories

Whenever walls occur in plan in one direction only (e.g. "cross wall" or "spine wall" construction), the value of l_r used when assessing the tie force in the direction parallel to the wall must be taken as either the actual length of the wall or the length which may be considered lost in the event of an accident, whichever is the lesser. The length that may be considered lost is taken as the length between adjacent lateral supports or between a lateral support and a free edge, as defined in Table 4-2.

4-2.6 Peripheral Ties.

At each floor level and roof level, provide an effectively continuous peripheral tie, capable of providing a design tie strength equal to 1.0 F_t, in kN (kip), located within 1.2 m (3.9 ft) of building edges or within the perimeter wall.

4-2.7 Horizontal Ties to External Columns and Walls.

4-2.7.1 General.

In SI units, each external column and, if the peripheral tie is not located within the wall, every meter length of external wall carrying vertical load must be anchored or tied horizontally into the structure at each floor and roof level with a required tensile strength (in kN) equal to the greater of:

a) the lesser of 2.0 F_t or $(l_s/2.5)$ F_t (kN)

or

b) 3% of the largest factored vertical load, carried by the column or wall at that level, due to conventional design load combinations (kN)

where: l_s = the floor to floor height (m).

In English units, each external column and, if the peripheral tie is not located within the wall, every 3.3 ft length of external wall carrying vertical load must be anchored or tied horizontally into the structure at each floor and roof level with a tie with a required tensile strength (in kips) equal to the greater of:

a) the lesser of 2.0 F_t or $(l_s/8.2)$ F_t (kip)

or

b) 3% of the largest factored vertical load, carried by the column or wall at that level, due to conventional design load combinations (kip)

where: l_s = the floor to floor height (ft).

Where the peripheral tie is located within the wall, provide only such horizontal tying as is required to anchor the internal ties to the peripheral ties.

4-2.7.2 Corner Column Ties.

Corner columns must be tied into the structure at each floor and roof level in each of two directions, approximately at right angles, with ties having a required tensile strength equal to the greater of a) or b) from Section 4-2.7.1.

4-2.8 Vertical Ties.

Each column and each load-bearing wall must be tied continuously from the lowest to the highest level. The tie must have a design strength in tension equal to the largest factored vertical load received by the column or wall from any one story, due to conventional design load combinations. Between floor levels, splice the column

reinforcement at the third points of the floor height, not at the intersection with the floors nor at mid-height.

When a column or a wall at its lowest level is supported by an element other than a foundation, make a general check for structural integrity (i.e., make a careful check and take appropriate action to insure that there is no inherent weakness of structural layout and that adequate means exist to transmit the dead, live, and wind loads safely from the highest supported level to the foundations).

4-2.9 Elements with Deficient Vertical Design Tie Strengths.

If it is not possible to provide the vertical design tie strength in a load-bearing element, then apply the Alternate Path method for each such deficient element. Remove each deficient element from the structure, one at a time and perform an AP analysis to verify that the structure can bridge over the missing element. The amount of element to be removed from the structure is given in Table 4-2 and additional detail is provided in Appendix B.

Table 4-2 Removal of Deficient Reinforced Concrete Vertical Tie Elements

Vertical Load-bearing Element Type	Definition of Element	Extent of Structure to Remove if Deficient
Column	Primary structural support member acting alone	Clear height between lateral restraints
Wall	All external and internal load-bearing walls	Length between adjacent lateral supports[A] or between a lateral support and a free edge. Clear height between lateral restraints.

[A] Using the definition of F_t in Section 4-2.5, a lateral support is considered to be:

1) a stiffened section of the wall not exceeding 1.0 m (3.3 ft) in length, capable of resisting a horizontal force of 1.5 F_t, in kN per meter height of the wall (0.45 F_t in kips per foot height of wall), or,
2) a partition of mass not less than 100 kg/m^2 (20.6 lb/ft^2) at right angles to the wall and so tied to it as to be able to resist a horizontal force of 0.5 F_t, in kN per meter height of the wall (0.15 F_t in kips per foot height of wall).

4-3 ALTERNATE PATH METHOD FOR REINFORCED CONCRETE.

Use the Alternate Path method to verify that the structure can bridge over removed elements. Follow the general procedure provided in Section 3-2.

4-3.1 Acceptability Criteria for Reinforced Concrete.

The acceptability criteria are provided in Table 4-3; calculate the design strengths per ACI 318-02. The subsequent actions for the AP model after violation of the acceptability criteria are detailed in the following sub-sections.

Table 4-3 Acceptability Criteria and Subsequent Action for Reinforced Concrete

Structural Behavior	Acceptability Criteria	Subsequent Action for Violation of Criteria
Element Flexure	ΦM_n[A]	Section 4-3.1.1
Element Combined Axial and Bending	ACI 318-02 Chapter 10 Provisions[A]	Section 4-3.1.2
Element Shear	ΦV_n[A]	Section 4-3.1.3
Connections	Connection Design Strength[A]	Section 4-3.1.4
Deformation	Deformation Limits, defined in Table 4-4	Section 4-3.2

[A] Nominal strengths are calculated with the appropriate material properties and over-strength factor Ω; all Φ factors are defined per ACI 318-02.

4-3.1.1 Flexural Resistance of Reinforced Concrete.

For reinforced concrete, the flexural design strength is equal to the nominal flexural strength calculated with the appropriate material properties and over-strength factor Ω, multiplied by the strength reduction factor Φ. Calculate the nominal flexural strength per ACI 318-02 procedures.

For Linear Static Analysis, if the required moment exceeds the flexural design strength and if the reinforcement layout is sufficient for a plastic hinge to form and

undergo significant rotation, add an equivalent plastic hinge to the model, by inserting a discrete hinge at the correct location within the member. Insert the hinge at the correct offset from the member end; use engineering analysis and judgment to determine the offset length, which must be less than ½ the depth of the member from the face of the column. Also, apply two constant moments, one at each side of the new hinge, in the appropriate direction for the acting moment; see Figure 3-9. For Nonlinear Static and Dynamic analysis, use software capable of representing post-peak flexural behavior. Ensure that shear failure will not occur prior to developing the full flexural design strength. Additional guidance on the modeling of plastic hinges in reinforced concrete can be found in *Plastic Methods for Steel and Concrete Structures* (Moy 1996) and *Reinforced Concrete: A Fundamental Approach* (Nawy 2000).

If the structural element is not able to develop a constant moment while undergoing continued deformations, remove the element when the internal moment exceeds the flexural design strength. Redistribute the loads associated with the element per Section 3-2.4.3.

4-3.1.2 Combined Axial and Bending Resistance of Reinforced Concrete.

The acceptability criteria for elements undergoing combined axial and bending loads are based on the provisions given in Chapter 10 of ACI 318-02, including the appropriate strength reduction factor Φ and the over-strength factor Ω. If the combination of axial load and flexure in an element exceeds the design strength and the un-factored axial load is greater than the nominal axial load strength at balanced strain P_b, remove the element and redistribute the loads associated with the element per Section 3-2.4.3; see Figure 4-1. If the un-factored axial load is less than P_b, then insert an equivalent plastic hinge into the column, per the procedure discussed in Section 4-3.1.1.

Figure 4-1 Axial Load and Moment at Balanced Strain

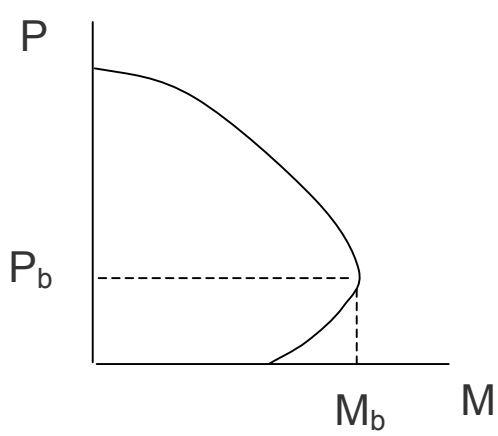

4-3.1.3 Shear Resistance of Reinforced Concrete.

The acceptability criteria for shear are based on the shear design strength of the cross-section, per ACI 318-02, using the appropriate strength reduction factor Φ and the over-strength factor Ω. If the element violates the shear criteria, remove the element and redistribute the loads associated with the element per Section 3-2.4.3.

4-3.1.4 Connections.

Calculate the design strengths for joints using ACI 318-02, including the appropriate strength reduction factor Φ and over-strength factor Ω. Consider the effects of embedment length, reinforcement continuity, and confinement of reinforcement in the joint when determining the joint design strength.

If the connection violates the criteria, remove it from the model. If both connections at the ends of an element fail, remove the element and redistribute the loads associated with the element per Section 3-2.4.3

4-3.2 Deformation Limits for Reinforced Concrete.

The Deformation Limits are given in Table 4-4. If an element or both connections at the ends of an element exceed a deformation limit, remove the element and redistribute the loads associated with the element per Section 3-2.4.3, before the analysis continues.

It is noted that Table 4-4 does not contain deformation limits for connections. Per FEMA 356, monolithic joints between beams and columns or walls are represented as rigid zones. Thus, the deformation limits are applied only to the structural elements.

4-4 ADDITIONAL DUCTILITY REQUIREMENTS.

For MLOP and HLOP structures, design all perimeter ground floor columns and load-bearing walls such that the lateral uniform load which defines the shear capacity is greater than the load associated with the flexural capacity, including compression membrane effects where appropriate. Methods for calculating the compression membrane effects can be found in *Reinforced Concrete Slabs* (Park and Gamble 1999) and UFC 3-340-01 *Design and Analysis of Hardened Structures to Conventional Weapons Effects*.

Table 4-4 Deformation Limits for Reinforced Concrete

	AP for Low LOP		AP for Medium and High LOP	
Component	**Ductility (μ)**	**Rotation, Degrees (θ)**	**Ductility (μ)**	**Rotation, Degrees (θ)**
Slab and Beam Without Tension Membrane[A]				
Single-Reinforced or Double-Reinforced w/o Shear Reinforcing[B]	-	3	-	2
Double-Reinforced w/ Shear Reinforcing[C]	-	6	-	4
Slab and Beam With Tension Membrane[A]				
Normal Proportions (L/h ≥ 5)	-	20	-	12
Deep Proportions (L/h < 5)	-	12	-	8
Compression Members				
Walls and Seismic Columns[D,E]	3	-	2	-
Non-Seismic Columns[E]	1	-	0.9	-

[A] Requirements for developing tension membrane response are provided in Park and Gamble 1999 and UFC 3-340-01; the tension membrane effect is an extension of the yield line theory of slabs and it increases the ultimate resistance. It cannot be developed when the slab has a free edge.
[B] Single-reinforced members have flexural bars in one face or mid-depth only. Double-reinforced members have flexural reinforcing in both faces.
[C] Stirrups or ties meeting ACI 318-02 minimums must enclose the flexural bars in both faces, otherwise use the response limits for Double-Reinforced w/o shear reinforcing.
[D] Seismic columns have ties or spirals in accordance with ACI 318-02 Chapter 21 seismic design provisions for special moment frames.
[E] Ductility of compression members is the ratio of total axial shortening to axial shortening at the elastic limit.

CHAPTER 5

STRUCTURAL STEEL DESIGN REQUIREMENTS

This chapter provides the specific requirements for designing a structural steel building to resist progressive collapse. Appendix D demonstrates the application of the structural steel design requirements for a 5-story office building.

For composite construction, such as concrete deck slabs on steel beams, sheet steel decking with an integral slab, and columns reinforced with structural steel shapes, the application of both the requirements of this chapter and those provided for reinforced concrete in Chapter 4 are required. For a concrete deck slab on steel beam in which the slab is used to provide internal tie capacity, the floor system and roof system would be required to meet the internal tie requirements of Section 4-2, while the steel frame would be required to meet the other tie requirements (vertical, peripheral, and external column) and the AP requirements of this chapter.

5-1 MATERIAL PROPERTIES FOR STRUCTURAL STEEL.

Apply the appropriate over-strength factors to the calculation of the design strengths for both Tie Forces and the Alternate Path method. Over-strength factors are given in Table 5-1.

Table 5-1 Over-Strength Factors for Structural Steel

Structural Steel	Ultimate Over-Strength Factor, Ω_u	Yield Over-Strength Factor, Ω_y
Hot-Rolled Structural Shapes and Bars		
ASTM A36/A36M	1.05	1.5
ASTM A573/A572M Grade 42	1.05	1.3
ASTM A992/A992M	1.05	1.1
All other grades	1.05	1.1
Hollow Structural Sections		
ASTM A500, A501, A618 and A847	1.05	1.3
Steel Pipe		
ASTM A53/A53M	1.05	1.4
Plates	1.05	1.1
All other products	1.05	1.1

5-2 STEEL TIE FORCE REQUIREMENTS.

5-2.1 General.

All buildings must be effectively tied together at each principal floor level. Each column must be effectively held in position by means of horizontal ties in two directions, approximately at right angles, at each principal floor level supported by that column. Horizontal ties must similarly be provided at the roof level, except where the steelwork only supports cladding that weighs not more than 0.7 kN/m^2 (14.6 lb/ft^2) and that carries only imposed roof loads and wind loads. Ties should be effectively straight.

Arrange continuous lines of ties as close as practical to the edges of the floor or roof and to each column line; see Figure 5-1. At re-entrant corners, anchor the tie members nearest to the edge into the steel framework, as indicated in Figures 5-1 and 5-2.

5-2.2 Strength Reduction Factor Φ for Steel Tie Forces

For the steel members and connections that provide the design tie strengths, use the appropriate tensile strength reduction factors Φ from the 2003 version of the *Manual of Steel Construction, Load and Resistance Factor Design* from the American Institute of Steel Construction (AISC LRFD 2003). For example, use a strength reduction factor of 0.75 for block shear at a bolted connection.

5-2.3 Horizontal Steel Ties

The horizontal ties may be either steel members, including those also used for other purposes, or steel reinforcement that is anchored to the steel frame and embedded in concrete, designed per ACI 318-02 and meeting the continuity and anchorage requirements of Section 4-2.4.

Figure 5-1 Example of Tying the Columns of a Steel Building

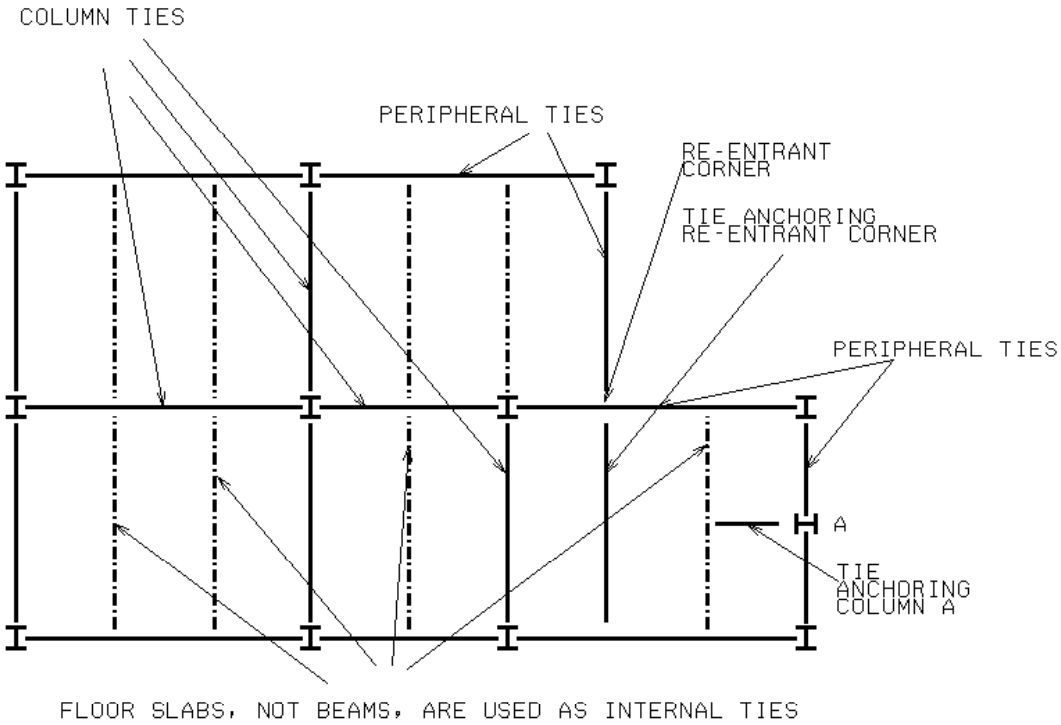

Figure 5-2 Example of General Tying of a Steel Building

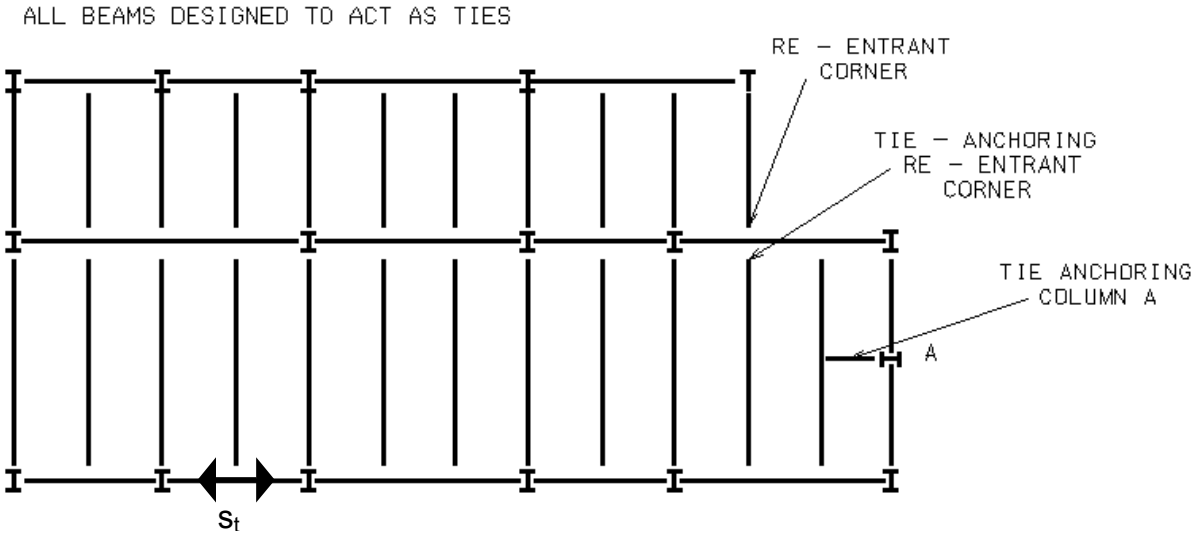

5-2

5-2.4 Internal Ties.

Design steel members acting as internal ties, and their end connections, to be capable of resisting the following required tie strength, which need not be considered as additive to other loads.

In SI units, the required tie strength is:

$0.5\ (1.2D + 1.6L)\ s_t\ L_l$ but not less than 75 kN

where:
- D = Dead Load (kN/m^2)
- L = Live Load (kN/m^2)
- L_l = Span (m)
- s_t = Mean transverse spacing of the ties adjacent to the ties being checked (m)

In English units, the required tie strength is

$0.5\ (1.2D + 1.6L)\ s_t\ L_l$ but not less than 16.9 kips

where:
- D = Dead Load (lb/ft^2)
- L = Live Load (lb/ft^2)
- L_l = Span (ft)
- s_t = Mean transverse spacing of the ties adjacent to the ties being checked (ft)

5-2.5 Peripheral Ties.

In SI units, peripheral ties must be capable of resisting:

$0.25\ (1.2D + 1.6L)\ s_t\ L_l$ but not less than 37.5 kN

In English units, peripheral ties must be capable of resisting:

$0.25\ (1.2D + 1.6L)\ s_t\ L_l$ but not less than 8.4 kips

5-2.6 Tying of External Columns.

The required tie strength for horizontal ties anchoring the column nearest to the edges of a floor or roof and acting perpendicular to the edge is equal to the greater of the load calculated in Section 5-2.4 or 1% of the maximum factored vertical dead and live load in the column that is being tied, considering all load combinations used in the design.

5-2.7 Vertical Ties.

All columns must be continuous through each beam-to-column connection. All column splices must provide a design tie strength equal to the largest factored vertical dead and live load reaction (from all load combinations used in the design) applied to the column at any single floor level located between that column splice and the next column splice down or the base of the column.

5-2.8 Columns with Deficient Vertical Tie Forces.

If it is not possible to provide the vertical required tie strength in any of the columns, then apply the Alternate Path method for each deficient column. Remove each deficient column from the structure, one at a time, and perform an AP analysis to verify that the structure can bridge over the missing column. The specific details for AP analysis of structural steel are provided next.

5-3 ALTERNATE PATH METHOD FOR STRUCTURAL STEEL.

The Alternate Path approach is used to verify that the structure can bridge over removed elements. The general procedure provided in Section 3-2 must be followed.

5-3.1 Acceptability Criteria for Structural Steel

The acceptability criteria are provided in Table 5-2; calculate the design strengths per AISC LRFD 2003. The subsequent actions for the AP model after violation of the acceptability criteria are detailed in the following sub-sections.

Table 5-2 Acceptability Criteria and Subsequent Action for Structural Steel

Structural Behavior	Acceptability Criteria	Subsequent Action for Violation of Criteria
Element Flexure	ΦM_n^A	Section 5-3.1.1
Element Combined Axial and Bending	AISC LRFD 2003 Chapter H Interaction Equations[A]	Section 5-3.1.2
Element Shear	ΦV_n^A	Section 5-3.1.3
Connections	Connection Design Strength[A]	Section 5-3.1.4
Deformation	Deformation Limits, defined in Table 5-3	Section 5-3.2

[A] Nominal strengths are calculated with the appropriate material properties and over-strength factors Ω_y and Ω_u depending upon the limit state; all Φ factors are defined per AISC LRFD 2003.

5-3.1.1 Flexural Resistance of Structural Steel.

A flexural member can fail by reaching its full plastic moment capacity, or it can fail by lateral-torsional buckling (LTB), flange local buckling (FLB), or web local buckling (WLB). Calculate nominal moment strength, M_n, in accordance with AISC LRFD 2003. If a flexural member's capacity is governed by a buckling mode of failure, remove the element when the internal moment reaches the nominal moment strength. Distribute the loads associated with the element in accordance with 3-2.4.3. If the member strength is not governed by buckling, the strength will be governed by plastification of the cross section and it may be possible for a plastic hinge to form.

Verify that deformation of primary members will not cause premature failure in secondary members, due to geometric interference; for instance, torsional rotation of a girder should not cause excessive deformation and stresses in any beam that frames into the girder with a simple shear tab connection.

5-3.1.1.1 Formation of Plastic Hinge.

If hinge formation, i.e. material non-linearity, is included in the AP analysis, the requirements of Section A5.1 of the AISC LRFD 2003 for plastic design must be met. AISC LRFD 2003 permits plastic analysis only when the structure can remain stable, both locally and globally, up to the point of plastic collapse or stabilization. Where the analysis indicates the formation of multiple plastic hinges, ensure each cross section or connection assumed to form a plastic hinge is capable of not only forming the hinge, but also capable of the deformation demands created by rotation of the hinge as additional hinges are formed in the element or structure. Since the element could be required to undergo large deformations as plastic hinges are being formed, special lateral bracing is required. The magnitude of the plastic moment, M_p, used for analysis must consider the influence of axial or shear force when appropriate. Further information on plastic design is provided in *The Plastic Methods of Structural Analysis* (Neal 1963) and *Plastic Design of Steel Frames* (Beedle 1958).

5-3.1.1.2 Modeling of a Plastic Hinge.

For Linear Static analyses, if the calculated moment exceeds the nominal moment strength and it is determined the element is capable of forming a plastic hinge, insert an "equivalent" plastic hinge into the model by inserting a discrete hinge in the member at an offset from the member end and add two constant moments, one at each side of the new hinge, in the appropriate direction for the acting moment; see Figure 3-9. The magnitude of the constant moments is equal to the determined plastic moment capacity of the element. Determine the location of the plastic hinge through engineering analysis and judgment or with the guidance provided for seismic connections in FEMA 350, *Recommended Seismic Design Criteria for New Steel Moment-Frame Buildings* and AISC 341-02, *Seismic Provisions for Structural Steel Buildings*. For Nonlinear Static and Dynamic Analysis, use software capable of representing post-peak flexural behavior and considering interaction effects of axial loads and moment. Ensure that shear failure will not occur prior to developing the full flexural design strength.

5-3.1.2 Combined Axial and Bending Resistance of Structural Steel.

The response of an element under combined axial force and bending moment can be force controlled (i.e. non-ductile) or deformation controlled (i.e. ductile). The response is determined by the magnitude of the axial force, cross sectional properties, magnitude/direction of moments, and the slenderness of the element. If the element is sufficiently braced to prevent buckling and the ratio of applied axial force to the axial force at yield (P_u/P_y where $P_y = A_gF_y$) is less than 0.15, the member can be treated as deformation controlled with no reduction in plastic moment capacity, i.e. as a flexural member in accordance with Section 5-3.1.1. For all other cases, treat the element as a beam-column and make the determination of whether the element is deformation or force controlled in accordance with the provisions of FEMA 356 Chapter 5.

If the controlling action for the element is force controlled, evaluate the strength of the element using the interaction equations in Chapter H of AISC LRFD 2003, incorporating the appropriate strength reduction factors Φ and the over-strength factor Ω. Remove the element from the model when the acceptability criteria is violated and redistribute the loads associated with the element per Section 3-2.4.3.

If the controlling action for the element is deformation controlled, the element can be modeled for inelastic action using the modeling parameters for nonlinear procedures in Table 5-6 in FEMA 356. The linear static and dynamic procedures specified in FEMA 356 are not consistent with the analysis approach of this UFC; however, the nonlinear modeling parameters provided in FEMA 356 can be utilized to determine the equivalent plastic hinge properties (see 5-3.1.1.2) for use in the linear static analysis procedure of this UFC. In linear analyses, take the force deformation characteristics of the elements as bilinear (elastic – perfectly plastic), ignoring the degrading portion of the relationship specified in FEMA 356. The modeling of plastic hinges for beam-columns in linear static analyses must include a reduction in the moment capacity due to the effect of the axial force (see FEMA 356 Equation 5-4). For nonlinear analysis, the modeling of elements, panel zones, or connections must follow the guidelines in FEMA 356. Nonlinear analyses must utilize coupled (P-M-M) hinges that yield based on the interaction of axial force and bending moment. In no cases shall the deformation limits established in FEMA 356 exceed the deformation limits established in Table 5-3 of this UFC.

5-3.1.3 Shear Resistance of Structural Steel.

The acceptability criteria for shear of structural steel is based on the nominal shear strength of the cross-section, per AISC LRFD 2003, multiplied by the strength reduction factor Φ and the over-strength factor Ω. If the element violates the shear criteria, remove the element and redistribute the loads associated with the element per Section 3-2.4.3.

5-3.1.4 Connections.

All connections must meet the requirements of AISC LRFD 2003; employ the appropriate strength reduction factor Φ for each limit state and over-strength factor Ω.

As detailed in AISC LRFD 2003, consider multiple limit states for the connections. If a connection violates one of the limit states criteria, remove it from the model. If both connections at the ends of an element fail, remove the element and redistribute the loads associated with the element per Section 3-2.4.3.

5-3.2 Deformation Limits for Structural Steel.

The Deformation Limits are given in Table 5-3. The definitions for Fully Restrained and Partially Restrained connections are given in Appendix B. Note that testing in accordance with Appendix S of AISC 341-02 can be used to verify and quantify the rotational capacities of connections that are not listed in Appendix B.

5-4 ADDITIONAL DUCTILITY REQUIREMENTS.

For MLOP and HLOP structures, design all perimeter ground floor columns and load-bearing walls such that the lateral uniform load which defines the shear capacity is greater than the load associated with the flexural capacity, including compression membrane effects where appropriate. Methods for calculating the compression membrane effects can be found in *Reinforced Concrete Slabs* (Park and Gamble 1999) and UFC 3-340-01.

Table 5-3 Deformation Limits for Structural Steel

	AP for Low LOP		AP for Medium and High LOP	
Component	**Ductility (μ)**	**Rotation, Degrees (θ)**	**Ductility (μ)**	**Rotation, Degrees (θ)**
Beams--Seismic Section[A]	20	12	10	6
Beams--Compact Section[A]	5	-	3	-
Beams--Non-Compact Section[A]	1.2	-	1	-
Plates	40	12	20	6
Columns and Beam-Columns	3	-	2	-
Steel Frame Connections; Fully Restrained				
Welded Beam Flange or Coverplated (all types)[B]	-	2.0	-	1.5
Reduced Beam Section[B]	-	2.6	-	2
Steel Frame Connections; Partially Restrained				
Limit State governed by rivet shear or flexural yielding of plate, angle or T-section[B]	-	2.0	-	1.5
Limit State governed by high strength bolt shear, tension failure of rivet or bolt, or tension failure of plate, angle or T-section[B]	-	1.3	-	0.9

[A] As defined in AISC 341-02.
[B] See Appendix B.

CHAPTER 6

MASONRY DESIGN REQUIREMENTS

This chapter provides the specific requirements for designing a masonry building to resist progressive collapse.

For composite construction, such as masonry load-bearing walls with wood floor and roof systems, the application of both the requirements of this chapter and those provided for the other material (e.g., wood in Chapter 7) are required. The floor system and roof system would be required to meet the internal tie requirements of Chapter 7, while the masonry walls would be required to meet the tie (vertical, peripheral, and wall) requirements or AP requirements of this chapter.

6-1 MATERIAL PROPERTIES FOR MASONRY.

All over strength factors for masonry are equal to 1.0.

6-2 MASONRY TIE FORCE REQUIREMENTS.

Representative connection details for developing tie forces in masonry construction are presented in Appendix E.

6-2.1 General.

Provide peripheral, internal, and column or wall ties at each floor level and at roof level, but where the roof is of lightweight construction, no such ties need be provided at that level. Horizontal ties may be provided by structural members or by reinforcement that is provided for other purposes.

6-2.2 Strength Reduction Factor Φ for Masonry Tie Forces

Use the strength reduction factors Φ for development and splices of reinforcement and for anchor bolts as specified in Section 3-1 of *Building Code Requirements for Masonry Structures* from ACI (ACI 530-02).

6-2.3 Proportioning of Ties.

Reinforcement that is provided for other purposes, such as flexure or shear, may be regarded as forming part or whole of the required ties.

6-2.4 Continuity and Anchorage of Ties.

Splices in longitudinal reinforcing bars that provide tie forces must be lapped, welded or mechanically joined, per Section 3-2. Do not locate splices near connections or mid-span. Tie reinforcing bars that provide tie forces at right angles to other

reinforcing bars using 135 degree hooks with a six-diameter (but not less than 3 in) extension.

Tie each load-bearing wall continuously from the lowest to the highest level.

6-2.5 Internal Ties.

6-2.5.1 General.

Anchor internal ties to peripheral ties at each end, or else, they must continue as wall or column ties. They must be effectively straight and continuous through the entire length of the slab, beam or girder. Internal ties may be provided:

- uniformly throughout the floor or roof width,
- concentrated, with a 6 m (19.7 ft) maximum horizontal tie spacing; or
- within walls no more than 0.5 m (1.6 ft) above or below the floor or roof and at 6 m (19.7 ft) maximum horizontal spacing (in addition to peripheral ties spaced evenly in the perimeter zone).

6-2.5.2 Two Way Spans.

In SI units and in both directions in a two way span, the internal ties must resist a required tie strength (in kN/m width) equal to the greater of:

a) $\frac{(1.0D + 1.0L)}{7.5} \frac{L_a}{5} F_t$ (kN/m)

or

b) $1.0\ F_t$ (kN/m)

where:

D	=	Dead Load (kN/m^2)
L	=	Live Load (kN/m^2)
L_a	=	Lesser of: i) the greatest distance in the direction of the tie between the centers of columns or other vertical load-bearing members where this distance is spanned by a single slab or by a system of beams and slabs, or, ii) 5 h. (m)
h	=	Clear story height (m)
F_t	=	"Basic Strength" = Lesser of (20 + 4 N_s) or 60
N_s	=	Number of stories including ground and basement

In English units and in both directions in a two way span, the internal ties must resist a required tie strength (in kip/ft width) equal to the greater of:

a) $\frac{(1.0D + 1.0L)}{} \frac{L_a}{} \frac{1.0}{} F_t$ (kip/ft)

156.6 16.4 3.3

or

b) $\frac{1.0}{3.3} F_t$ (kip/ft)

where:

D	=	Dead Load (lb/ft^2)
L	=	Live Load (lb/ft^2)
L_a	=	Lesser of: i) the greatest distance in the direction of the tie between the centers of columns or other vertical load-bearing members where this distance is spanned by a single slab or by a system of beams and slabs, or, ii) 5 h. (ft)
h	=	Clear story height (ft)
F_t	=	"Basic Strength" = Lesser of (4.5 + 0.9 N_s) or 13.5
N_s	=	Number of stories including ground and basement

6-2.5.3 One Way Spans.

In the direction of the span in a one way span, the internal ties must resist the greater of the required tie strengths specified in a) and b) of Section 6-2.5.2.

In the direction perpendicular to the span, the internal ties must resist a required tie strength of F_t.

6-2.6 Peripheral Ties.

The required tie strength for peripheral ties is 1.0 F_t.

Place peripheral ties within 1.2 m (3.9 ft) of the edge of a floor or roof or in the perimeter wall and anchor at re-entrant corners or changes of construction.

6-2.7 Horizontal Ties to External Columns and Walls.

In SI units, each external column and every meter length of external wall carrying vertical load must be anchored or tied horizontally into the structure at each floor and roof level with a design tie strength equal to:

2.0 F_t or (h/2.5) F_t, whichever is smaller (kN)

where:

h	=	Clear story height (m)
F_t	=	"Basic Strength" = Lesser of (20 + 4 N_s) or 60
N_s	=	Number of stories including ground and basement

In English units, each external column and every 3.3 ft length of external wall carrying vertical load must be anchored or tied horizontally into the structure at each floor and roof level with a design tie strength equal to:

$$2.0\ F_t \text{ or } (h/8.2)\ F_t, \text{ whichever is smaller} \qquad \text{(kip)}$$

where:
- h = Clear story height (ft)
- F_t = "Basic Strength" = Lesser of $(4.5 + 0.9\ N_s)$ or 13.5
- N_s = Number of stories including ground and basement

Design the tie connection to masonry in accordance with ACI 530-02.

Tie corner columns in both directions. Space wall ties, where required, uniformly along the length of the wall or concentrated at centers not more than 5 m (16.4 ft) apart and not more than 2.5 m (8.2 ft) from the end of the wall. External column and wall ties may be provided partly or wholly by the same reinforcement as peripheral and internal ties.

6-2.8 Vertical Ties.

6-2.8.1 Wall Requirements.

Columns and walls that are loadbearing and are required to have vertical ties must meet the requirements in Table 6-1.

Position vertical ties at a maximum of 5 m (16.4 ft) on center, along the wall, and 2.5 m (8.2 ft) maximum from any free end of any wall (i.e., there is no return at the wall end). Vertical ties must extend from the roof level to the foundation. Fully anchor vertical ties at each end and at each floor level; any joint must be capable of transmitting the required tensile forces.

For full vertical tying to be considered effective, anchor precast or in-situ concrete or other heavy floor or roof units in the direction of their span, to adjacent spans, in such a manner as to be capable of resisting a horizontal tensile force of F_t ,in kN per meter width (kips per 3.3 ft width), where F_t is given in Section 6-2.5. The wall must be constrained between concrete surfaces or other similar construction, excluding wood, capable of providing resistance to lateral movement and rotation across the full width of the wall.

6-2.8.2 Required Vertical Tie Strength.

In SI units, if the minimum requirements in Table 6-1 are met, a column or every meter length of a load-bearing wall must provide a required tie strength equal to:

$$\frac{34\ A\ (h_a/t)^2}{8\text{x}10^6} \text{ or } 100 \text{ whichever is larger} \qquad \text{(kN)}$$

where: A = Horizontal cross sectional area of the column or wall including piers, but excluding the non-load-bearing wythe, if any, of an external wall for cavity construction. (mm^2)

h_a = Clear height of a column or wall between restraining surfaces (m)

t = Wall thickness or column dimension (m)

In English units, if the minimum requirements in Table 6-1 are met, a column or every 3.3 ft length of a load-bearing wall must provide a required tie strength equal to:

$$6.2 \times 10^{-4} A \ (h_a/t)^2 \quad \text{or} \quad 22.5 \quad \text{whichever is larger} \qquad \text{(kips)}$$

where: A = Horizontal cross sectional area of the column or wall including piers, but excluding the non-load-bearing wythe, if any of an external wall for cavity construction. (ft^2)

h_a = Clear height of a column or wall between restraining surfaces (ft)

t = Wall thickness or column dimension (ft)

Table 6-1 Minimum Properties for Masonry Walls with Vertical Ties

Property	Requirement
Minimum thickness of a solid wall or one load-bearing wythe of a cavity wall	150 mm (5.9 in)
Minimum characteristic compressive strength of masonry	5 N/mm^2 (725 psi)
Maximum ratio h_a/t	20
Allowable mortar designations	S, N

6-2.9 Load-Bearing Walls and Columns with Deficient Vertical Tie Forces.

If it is not possible to provide the vertical required tie strength in any of the load-bearing elements, then apply the Alternate Path method for each such deficient element. Remove each deficient element from the structure, one at a time, and perform an AP analysis to verify that the structure can bridge over the missing element. The amount of element to be removed from the structure is given in Table 6-2 and additional detail is provided in Appendix B.

Table 6-2 Removal of Deficient Masonry Vertical Tie Elements

Vertical Load-bearing Element Type	Definition of Element	Extent of Structure to Remove if Deficient
Column	Primary structural support member acting alone	Clear height between lateral restraints
Wall Incorporating One or More Lateral Supports[A]	All external and internal load-bearing walls	Length between lateral supports or length between a lateral support and the end of the wall. Remove clear height between lateral restraints
Wall Without Lateral Supports	All external and internal load-bearing walls	For internal walls: length not exceeding 2.25 H, anywhere along the wall where H is the clear height of the wall. For external walls: Full length. For both wall types: clear height between lateral restraints.

[A] Using the definition of F_t in Section 6.2.4, lateral supports may be provided by the following:

1) An intersecting or return wall tied to a wall to which it affords support, with connections capable of resisting a force of F_t in kN per meter height of wall (0.45 F_t in kips per foot height of wall), having a length without openings of not less than H/2 at right angles to the supported wall and having an average weight of not less than 340 kg/m^2 (70 lb/ft^2).
2) A pier or stiffened section of the wall [not exceeding 1 m (3.3 ft) in length], capable of resisting a horizontal force of 1.5 F_t kN per meter height of wall (0.45 F_t in kips per foot height of wall).
3) A substantial partition at right angles to the wall having an average weight of not less than 150 kg/m^2 (30.9 lb/ft^2), tied with connections capable of resisting a force of 0.5 F_t kN per meter height of wall (0.15 F_t in kips per foot height of wall) and having a length without openings of not less than H at right angles to the supported wall.

6-3 ALTERNATE PATH METHOD FOR MASONRY.

The Alternate Path approach is used to verify that the structure can bridge over removed elements. Follow the general procedure provided in Section 3-2.

6-3.1 Acceptability Criteria for Masonry.

The acceptability criteria are provided in Table 6-2; calculate the design strengths per ACI 530-02. The subsequent actions for the AP model after violation of the acceptability criteria are detailed in the following sub-sections.

Table 6-3 Acceptability Criteria and Subsequent Action for Masonry

Structural Behavior	Acceptability Criteria	Subsequent Action for AP Model
Element Flexure	ΦM_n^A	Section 6-3.1.1
Element Axial	ΦP_n^A	Section 6-3.1.2
Element Shear	ΦV_n^A	Section 6-3.1.3
Connections	Connection Design Strength[A]	Section 6-3.1.4
Deformation	Deformation Limits, defined in Table 6-4	Section 6-3.2

[A] Nominal strengths are calculated with the appropriate material properties and over-strength factor Ω; all Φ factors are defined per Chapter 3 of ACI 530-02.

6-3.1.1 Flexural Resistance of Masonry.

For masonry, the flexural design strength is equal to the nominal flexural strength multiplied by the strength reduction factor Φ. Calculate the nominal flexural strength per ACI 530-02 procedures.

For Linear Static analysis, if the required moment exceeds the flexural design strength and if the reinforcement layout is sufficient for a plastic hinge to form and undergo significant rotation, add an effective plastic hinge to the model, by inserting a discrete hinge into the member at an offset from the member end. Apply two constant moments, one at each side of the discrete hinge in the appropriate direction for the acting moment; see Figure 3-9. Determine the location of the effective plastic hinge through engineering analysis. For Nonlinear Static and Dynamic Analysis, use software

capable of representing post-peak flexural behavior. Ensure that shear failure will not occur prior to developing the full flexural design strength.

If the structural element is not able to develop a constant moment while undergoing continued deformation, remove the element when the required moment exceeds the flexural design strength and redistribute the loads associated with the element per Section 3-2.4.3.

6-3.1.2 Axial Resistance of Masonry.

The acceptability criteria for axial loads is based on the axial design strength, as calculated in Chapter 3 of ACI 530-02, using the appropriate strength reduction factor Φ. If the element violates the criteria, remove the element and redistribute the loads associated with the element per Section 3-2.4.3.

6-3.1.3 Shear Resistance of Masonry.

The acceptability criteria for shear is based on the shear design strength of the cross-section, per Chapter 3 of ACI 530-02, using the appropriate strength reduction factor Φ. If the element violates the shear criteria, remove the element and redistribute the loads associated with the element per Section 3-2.4.3.

6-3.1.4 Connections.

Design strengths for connections are calculated using ACI 530-02, including the appropriate strength reduction factor Φ. If the connection violates a criterion, remove it from the model. If both connections at the ends of an element fail, remove the element and redistribute the loads associated with the element per Section 3-2.4.3.

6-3.2 Deformation Limits for Masonry.

The Deformation Limits are given in Table 6-4. Note that Table 6-4 does not contain deformation limits for connections; thus, the deformation limits are applied only to the structural elements.

Table 6-4 Deformation Limits for Masonry

	AP for Low LOP		AP for Medium and High LOP	
Component	**Ductility (μ)**	**Rotation, Degrees (θ)**	**Ductility (μ)**	**Rotation, Degrees (θ)**
Unreinforced Masonry[A]	-	2	-	1
Reinforced Masonry[B]	-	7	-	2

[A] Response of unreinforced masonry walls is also limited by D/t, the maximum member displacement to thickness ratio. This ratio is limited to 0.75. Compare this limit with the rotation limits and use the most restrictive condition. Also, all of these deformation limits apply to European clay tile and single, double and triple wythe brick.

[B] The ultimate resistance is based on the moment capacity using 90% of F_y for reinforcement.

6-4 ADDITIONAL DUCTILITY REQUIREMENTS.

For MLOP and HLOP structures, design all perimeter ground floor columns and load-bearing walls such that the lateral uniform load which defines the shear capacity is greater than the load associated with the flexural capacity, including compression membrane effects where appropriate. Methods for calculating the compression membrane effects can be found in *Reinforced Concrete Slabs* and UFC 3-340-01.

CHAPTER 7

WOOD DESIGN REQUIREMENTS

This chapter provides the specific requirements for designing a wood building to resist progressive collapse.

Wood construction takes several forms in current practice. As described in the 1996 version of AF&PA/ASCE 16-95, *Load and Resistance Factor Design Manual for Engineered Wood Construction*, wood construction can be categorized as wood frame, noncombustible wall-wood joist, and heavy timber. As most wood construction used for DoD facilities falls under the wood frame category, this is the focus of these provisions.

Noncombustible wall-wood joist construction, such as masonry load-bearing walls with wood floor and roof systems, is considered a composite system and requires the application of both the requirements of this chapter and those provided for masonry in Chapter 6. The floor system and roof system are required to meet the internal tie requirements of this chapter, while the masonry walls are required to meet the tie (vertical, peripheral, and wall) requirements or AP requirements of Chapter 6.

7-1 MATERIAL PROPERTIES FOR WOOD.

All over-strength factors for wood are equal to 1.0. In addition, the time effect factor λ, shown in Table 7-2 and discussed in Appendix B, is equal to 1.

7-2 WOOD TIE FORCE REQUIREMENTS.

The following sections provide the necessary information to calculate the required tie forces. An example showing the calculation of the required tie forces and the design of connections and elements to resist tie forces is presented in Appendix F.

7-2.1 General.

Wood frame construction is analogous to closely spaced columns and beams with nominal tie resistance provided at each joist to wall stud junction. Peripheral, internal, vertical, and horizontal ties to columns and walls are required. Structural members and connections that are provided for other purposes may be regarded as forming part or whole of the required ties.

As specified below, ties must, in whole or in part, be spread evenly in the diaphragm or must be grouped at or in beams, walls or other appropriate positions.

7-2.2 Strength Reduction Factor Φ for Wood Tie Forces

For tension members and mechanical connectors that provide the design tie strengths, use the appropriate tensile strength reduction factors Φ from AF&PA/ASCE 16-95. For example, use a strength reduction factor of 0.65 for nails, spikes, and wood screws under lateral load.

7-2.3 Continuity and Anchorage of Ties.

At re-entrant corners or at substantial changes in construction, take care to ensure that the ties are adequately anchored or otherwise made effective.

7-2.4 Internal Ties.

7-2.4.1 Distribution and Location.

Distribute these ties at each floor and roof level in two directions approximately at right angles. They must be effectively continuous and must be anchored to peripheral ties at each end (unless continuing as horizontal ties to columns or walls). They must, in whole or in part, be spread evenly in the diaphragm or must be grouped at or in beams, walls or other appropriate positions, but at spacings not greater than 1.5 l_r, where l_r is the greater of the distances between the centers of the frames or walls supporting any two adjacent floor spaces in the direction of the tie under consideration (i.e., approximately the span length associated with the tie). In walls, they must be within 0.5 m (1.6 ft) of the top or bottom of the floor diaphragm.

7-2.4.2 Required Tie Force Capacity.

In SI units and in each direction, internal ties must resist a tension (in kN/m width) equal to the greater of:

a) $\frac{(1.0D + 1.0L)}{3.1} \frac{l_r}{4.6} F_t$ (kN/m)

or

b) $1.0\ F_t$ (kN/m)

where:

D	=	Dead Load (kN/m^2)
L	=	Live Load (kN/m^2)
l_r	=	Greater of the distances between the centers of the columns, frames or walls supporting any two adjacent floor spaces in the direction of the tie under consideration (m)
F_t	=	"Basic Strength" = Lesser of (7.3 + 1.46 n_o) or 21.9
n_o	=	Number of stories

In English units and in each direction, internal ties must have a required tensile strength (in kip/ft width) equal to the greater of:

a) $\frac{(1.0D + 1.0L)}{65} \quad \frac{l_r}{15} \quad \frac{1.0}{3.3} F_t$ (kip/ft)

or

b) $\frac{1.0}{3.3} F_t$ (kip/ft)

where:

D	=	Dead Load (lb/ft^2)
L	=	Live Load (lb/ft^2)
l_r	=	Greater of the distances between the centers of the columns, frames or walls supporting any two adjacent floor spaces in the direction of the tie under consideration (ft)
F_t	=	"Basic Strength" = Lesser of $(1.62 + 0.33\ n_o)$ or 4.92
n_o	=	Number of stories

Whenever walls occur in plan in one direction only (e.g. "cross wall" or "spine wall" construction), take the value of l_r used when assessing the tie force in the direction parallel to the wall as either the actual length of the wall or the length which may be considered lost in the event of an accident, whichever is the lesser. Take the length that may be considered lost as the length between adjacent lateral supports or between a lateral support and a free edge.

7-2.5 Peripheral Ties.

At each floor level and roof level, provide an effectively continuous peripheral tie, capable of providing a required tensile strength equal to 1.0 F_t, located within 1.2 m (3.9 ft) of building edges or within the perimeter wall.

7-2.6 Horizontal Ties to External Walls and Columns.

In SI units, each external column and, if the peripheral tie is not located within the wall, every meter length of external wall carrying vertical load must be anchored or tied horizontally into the structure at each floor and roof level with a required tensile strength (in kN) equal to the greater of:

a) the lesser of 2.0 F_t or (l_s/2.5) F_t (kN)

or

b) 3% of the largest factored vertical load, carried by the column or wall at that level, due to conventional design load combinations (kN)

where: l_s = the floor to floor height (m).

In English units, each external column and, if the peripheral tie is not located within the wall, every 3.3 ft length of external wall carrying vertical load must be anchored or tied horizontally into the structure at each floor and roof level with a tie with a required tensile strength (in kips) equal to the greater of:

a) the lesser of 2.0 F_t or (l_s/8.2) F_t (kip)

or

b) 3% of the largest factored vertical load, carried by the column or wall at that level, due to conventional design load combinations (kip)

where: l_s = the floor to floor height (ft).

Where the peripheral tie is located within the wall, provide horizontal ties adequate to anchor the internal ties to the peripheral ties.

Corner columns must be tied into the structure at each floor and roof level in each of two directions, approximately at right angles, with ties having a required tensile strength equal to the greater of a) or b) from the previous section.

7-2.7 Vertical Ties.

Tie each column and load-bearing wall continuously from the lowest to the highest level. The tie must be capable of resisting a tensile force equal to the largest factored vertical load received by the column or wall from any one story, due to conventional design load combinations.

When a wall at its lowest level is supported by an element other than a foundation, make a general check for structural integrity (i.e., make a careful check and take appropriate action to insure that there is no inherent weakness of structural layout and that adequate means exist to transmit the dead, live, and wind loads safely from the highest supported level to the foundations).

Note that recent research and full scale tests on wood frame construction conducted in the United Kingdom suggest that although the development of adequate tie force capacity can be shown for wood frame construction, it may be more efficient to show the bridging of deficient vertical load-bearing elements using the AP approach.

Further information on the AP approach for wood frame construction is provided in Section 7-3.

7-2.8 Load-bearing Elements with Deficient Vertical Tie Forces.

If it is not possible to provide the required vertical tie force in any of the load-bearing elements, apply the Alternate Path method for each such deficient element. Remove each deficient element from the structure, one at a time, and perform an AP analysis to verify that the structure can bridge over the missing element. The amount of element to be removed from the structure is given in Table 7-1.

Table 7-1 Removal of Deficient Wood Vertical Tie Elements

Vertical Load-bearing Element Type	Definition of Element	Extent of Structure to Remove if Deficient
Column	Primary structural support member acting alone	Clear height between lateral restraints
External Wall	All load-bearing walls that form the perimeter and external face of the building but not room partitions	Length between intersecting walls (perpendicular partitions, return walls, internal room dividers), or between columns. Minimum length of wall to be considered 2.4 m (7.9 ft). Clear height between lateral restraints
Internal Wall	All load-bearing walls within the building including room partitions	Length limited between intersecting walls or 2.25H, where H is the clear height between lateral supports (i.e. floor-to-floor). Clear height between lateral restraints

7-3 ALTERNATE PATH METHOD FOR WOOD.

The Alternate Path approach is used to verify that the structure can bridge over removed elements. The general procedure provided in Section 3-2 must be followed.

7-3.1 Acceptability Criteria for Wood

The acceptability criteria are provided in Table 7-2; calculate the design strengths per AF&PA/ASCE 16-95. The subsequent actions for the AP model after violation of the acceptability criteria are detailed in the following sub-sections.

Table 7-2 Acceptability Criteria and Subsequent Action for Wood

Structural Behavior	Acceptability Criteria	Subsequent Action for AP Model
Element Flexure	$\Phi \lambda M'^{A}$	Section 7-3.1.1
Element Combined Axial and Bending	AF&PA/ASCE 16-95 Chapter 6 Interaction Equations, Include λ^{A}	Section 7-3.1.2
Element Shear	$\Phi \lambda V'^{A}$	Section 7-3.1.3
Connections	Connection Design Strength, Include λ^{A}	Section 7-3.1.4
Deformation	Deformation Limits, Defined in Table 7-3	Section 7-3.2

[A] Nominal strengths are calculated with the appropriate material properties and over-strength factor Ω. All Φ factors are defined per AF&PA/ASCE 16-95. The over-strength factor and time effect factor are both 1.0

7-3.1.1 Flexural Resistance of Wood.

For wood, the flexural design strength is equal to the nominal flexural strength, calculated with the appropriate over-strength factor Ω and time effect factor λ, multiplied by the strength reduction factor Φ. Calculate the nominal flexural strength per Chapter 5 of AF&PA/ASCE 16-95. If the required moment exceeds the flexural design strength, remove the element and redistribute the loads associated with the element per Section 3-2.4.3.

7-3.1.2 Combined Axial and Bending Resistance of Wood.

The acceptability criteria for combined axial and bending loads is based on the interaction equation provided in Chapter 6 of AF&PA/ASCE 16-95, using the appropriate strength reduction factor Φ and over-strength factor Ω. If the element violates the criteria, remove the element and redistribute the loads associated with the element per Section 3-2.4.3.

7-3.1.3 Shear Resistance of Wood.

The acceptability criteria for shear is based on the shear design strength of the cross-section, per Chapter 5 of AF&PA/ASCE 16-95, using the appropriate strength reduction factor Φ and over-strength factor Ω. If the element violates the criteria, remove the element and redistribute the loads associated with the element per Section 3-2.4.3.

7-3.1.4 Connections.

Calculate design strengths for connections per AF&PA/ASCE 16-95, using the appropriate strength reduction factor Φ and over-strength factor Ω. If the connection violates the criteria, remove it from the model. If both connections at the ends of an element fail, remove the element and redistribute the loads associated with the element per Section 3-2.4.3.

7-3.2 Deformation Limits for Wood.

The Deformation Limits are given in Table 7-3. Note that Table 7-3 does not contain deformation limits for connections; thus, the deformation limits are applied only to the structural elements.

7-4 ADDITIONAL DUCTILITY REQUIREMENTS.

For MLOP and HLOP structures, design all perimeter ground floor columns and load-bearing walls such that the lateral uniform load which defines the shear capacity is greater than the load associated with the flexural capacity, including compression membrane effects where appropriate. Methods for calculating the compression membrane effects can be found in *Reinforced Concrete Slabs* and UFC 3-340-01.

Table 7-3 Deformation Limits for Wood

	AP for Low LOP		AP for Medium and High LOP	
Component	**Ductility (μ)**	**Rotation, Degrees (θ)**	**Ductility (μ)**	**Rotation, Degrees (θ)**
Walls	-	5.1	-	2.3
Roofs	-	3.2	-	1.4
Beams	-	3.7	-	1.7
External Columns - Flexural Mode	-	3.7	-	1.7
Internal Columns - Buckling	1.0	2.4	-	-

CHAPTER 8

COLD-FORMED STEEL DESIGN REQUIREMENTS

This chapter provides the specific requirements for designing a cold-formed steel building to resist progressive collapse.

For composite construction, the application of both the requirements of this chapter and those provided for the other materials are required. If wood floor diaphragms are used, the floor system and roof system are required to meet the internal tie requirements of Chapter 7, while the steel walls are required to meet the tie (vertical, peripheral, and wall) requirements or AP requirements of this chapter.

8-1 MATERIAL PROPERTIES FOR COLD-FORMED STEEL.

All over-strength factors for cold-formed steel are equal to 1.0.

8-2 COLD-FORMED STEEL TIE FORCE REQUIREMENTS.

8-2.1 General.

Cold-formed steel construction is analogous to closely spaced columns and beams, with nominal tie resistance provided at each joist to wall stud junction. Peripheral, internal, vertical, and horizontal ties to columns and walls are required. Structural members and connections that are provided for other purposes may be regarded as forming part or whole of the required ties.

As specified below, ties may, in whole or in part, be spread evenly in the diaphragm or may be grouped at or in beams, walls or other appropriate positions.

8-2.2 Strength Reduction Factor Φ for Steel Tie Forces

For the steel members and connections that provide the design tie strengths, use the appropriate tensile strength reduction factors Φ from the 2002 version of the AISI/COS/NASPEC 2001, *AISI Standard North American Specification for the Design of Cold-Formed Steel Structural Members* . For example, use a strength reduction factor of 0.90 for welds with tension or compression normal to the effective area or parallel to the axis of the weld.

8-2.3 Continuity and Anchorage of Ties.

At re-entrant corners or at substantial changes in construction, take care to ensure that the ties are adequately anchored or otherwise made effective.

8-2.4 Internal Ties.

8-2.4.1 Distribution and Location.

Distribute these ties at each floor and roof level in two directions approximately at right angles. They must be effectively continuous and must be anchored to peripheral ties at each end (unless continuing as horizontal ties to columns or walls). They may, in whole or in part, be spread evenly in the floor diaphragm or may be grouped at or in beams, walls or other appropriate positions, but at spacings not greater than 1.5 l_r, where l_r is the greater of the distances between the centers of the frames or walls supporting any two adjacent floor spaces in the direction of the tie under consideration (i.e., approximately the span length associated with the tie). In walls, they must be within 0.5 m (1.6 ft) of the top or bottom of the floor diaphragm.

8-2.4.2 Strength.

In SI units and in each direction, internal ties must resist a tension (in kN/m width) equal to the greater of:

a) $\frac{(1.0D + 1.0L)}{3.1} \quad \frac{l_r}{4.6} \quad F_t$ (kN/m)

or

b) $1.0\ F_t$ (kN/m)

where:

D	=	Dead Load (kN/m^2)
L	=	Live Load (kN/m^2)
l_r	=	Greater of the distances between the centers of the columns, frames or walls supporting any two adjacent floor spaces in the direction of the tie under consideration (m)
F_t	=	"Basic Strength" = Lesser of $(7.3 + 1.46\ n_o)$ or 21.9
n_o	=	Number of stories

In English units and in each direction, internal ties must have a required tensile strength (in kip/ft width) equal to the greater of:

a) $\frac{(1.0D + 1.0L)}{156.6} \quad \frac{l_r}{16.4} \quad \frac{1.0}{3.3}\ F_t$ (kip/ft)

or

b) $\frac{1.0}{3.3}\ F_t$ (kip/ft)

where: D = Dead Load (lb/ft^2)
L = Live Load (lb/ft^2)
l_r = Greater of the distances between the centers of the columns, frames or walls supporting any two adjacent floor spaces in the direction of the tie under consideration (ft)
F_t = "Basic Strength" = Lesser of $(1.62 + 0.33\ n_o)$ or 4.92
n_o = Number of stories

Whenever walls occur in plan in one direction only (e.g. "cross wall" or "spine wall" construction), take the value of l_r used when assessing the tie force in the direction parallel to the wall as either the actual length of the wall or the length which may be considered lost in the event of an accident, whichever is the lesser. Take the length that may be considered lost as the length between adjacent lateral supports or between a lateral support and a free edge.

8-2.5 Peripheral Ties.

At each floor level and roof level, provide an effectively continuous peripheral tie, capable of providing a required tensile strength equal to 1.0 F_t, located within 1.2 m (3.9 ft) of building edges or within the perimeter wall.

8-2.6 Horizontal Ties to External Walls and Columns.

In SI units, each external column and, if the peripheral tie is not located within the wall, every meter length of external wall carrying vertical load must be anchored or tied horizontally into the structure at each floor and roof level with a required tensile strength (in kN) equal to the greater of:

a) the lesser of 2.0 F_t or $(l_s/2.5)\ F_t$ (kN)

or

b) 3% of the total ultimate vertical load carried by the column or wall at that level (kN)

where: l_s = the floor to floor height (m).

In English units, each external column and, if the peripheral tie is not located within the wall, every 3.3 ft length of external wall carrying vertical load must be anchored or tied horizontally into the structure at each floor and roof level with a tie with a required tensile strength (in kips) equal to the greater of:

a) the lesser of 2.0 F_t or $(l_s/8.2)$ F_t (kip)

or

b) 3% of the total ultimate vertical load carried by the column or wall at that level (kip)

where: l_s = the floor to floor height (ft).

Where the peripheral tie is located within the wall, provide horizontal ties adequate to anchor the internal ties to the peripheral ties.

Tie corner columns into the structure at each floor and roof level in each of two directions, approximately at right angles, with ties having a required tensile strength equal to the greater of a) or b) from the previous section.

8-2.7 Vertical Ties.

Tie each column and load-bearing wall continuously from the lowest to the highest level. The tie must be capable of resisting a tensile force equal to the maximum design ultimate dead and live load received by the wall or column from any one story.

When a wall at its lowest level is supported by an element other than a foundation, make a general check for structural integrity (i.e., make a careful check and take appropriate action to ensure that there is no inherent weakness of structural layout and that adequate means exist to transmit the dead, live, and wind loads safely from the highest supported level to the foundations).

8-2.8 Load-bearing Elements with Deficient Vertical Tie Forces.

If it is not possible to provide the required vertical tie force in any of the load-bearing elements, apply the Alternate Path method for each such deficient element. Remove each deficient element from the structure, one at a time, and perform an AP analysis to verify that the structure can bridge over the missing element. The amount of element to be removed from the structure is given in Table 8-1.

Table 8-1 Removal of Deficient Cold-Formed Steel Vertical Tie Elements

Vertical Load-bearing Element type	Definition of Element	Extent of Structure to Remove if Deficient
Column	Primary structural support member acting alone	Clear height between lateral restraints
External Wall	All load-bearing walls that form the perimeter and external face of the building but not room partitions	Length between intersecting walls (perpendicular partitions, return walls, internal room dividers), or between columns. Minimum length of wall to be considered 2.4 m (7.9 ft) Clear height between lateral restraints
Internal Wall	All load-bearing walls within the building including room partitions	Length limited between intersecting walls or 2.25H, where H is the clear height between lateral supports (i.e. floor-to-floor). Clear height between lateral restraints

8-3 ALTERNATE PATH METHOD FOR COLD-FORMED STEEL.

The Alternate Path approach is used to verify that the structure can bridge over removed elements. The general procedure provided in Section 3-2 must be followed.

8-3.1 Acceptability Criteria for Cold-Formed Steel.

The acceptability criteria are provided in Table 8-2; calculate the required design strengths per AISI/COS/NASPEC 2001. The subsequent actions for the AP model after violation of the acceptability criteria are detailed in the following sub-sections.

Table 8-2 Acceptability Criteria and Subsequent Action for Cold-Formed Steel

Structural Behavior	Acceptability Criteria	Subsequent Action for AP Model
Element Flexure	ΦM_n^A	Section 8-3.1.1
Element Combined Axial and Bending	AISI/COS/NASPEC 2001 Chapter C5 Interaction Equations	Section 8-3.1.2
Element Shear	ΦV_n^A	Section 8-3.1.3
Connections	Connection Design Strength[A]	Section 8-3.1.4
Deformation	Deformation Limits, defined in Table 8-3	Section 8-3.2

[A] Nominal strengths are calculated with the appropriate material properties and over-strength factor Ω; all Φ factors are defined per AISI/COS/NASPEC 2001.

8-3.1.1 Flexural Resistance of Cold-Formed Steel.

For cold-formed steel, the flexural design strength is equal to the nominal flexural strength, multiplied by the strength reduction factor Φ; calculate the nominal flexural strength per AISI/COS/NASPEC 2001 procedures.

For Linear Static Analysis, if the required moment exceeds the flexural design strength and if the geometry and supports of the cold-formed steel member are sufficient for a plastic hinge to form and undergo significant rotation, add an equivalent plastic hinge to the model, by inserting a discrete hinge at the correct location within the member. For a connection with a plastic hinge, insert the hinge at the offset from the member end; use engineering analysis and judgment to determine the offset length. Also, apply two constant moments, one at each side of the new hinge, in the appropriate direction for the acting moment; see Figure 3-9. For Nonlinear Static and Dynamic Analysis, use software capable of representing post-peak flexural behavior. Ensure that shear failure will not occur prior to developing the full flexural design strength.

If the structural element is not able to develop a constant moment while undergoing continued deformations, remove the element when the internal moment exceeds the flexural design strength. Redistribute the loads associated with the element per Section 3-2.4.3.

8-3.1.2 Combined Axial and Bending Resistance of Cold-Formed Steel.

The acceptability criteria for elements undergoing combined axial and bending loads is based on the interaction equations in Chapter C5 of AISI/COS/NASPEC 2001, using the appropriate strength reduction factor Φ and over-strength factor Ω. If the element violates the criteria, remove the element and redistribute the loads associated with the element per Section 3-2.4.3.

8-3.1.3 Shear Resistance of Cold-Formed Steel.

The acceptability criteria for shear is based on the shear design strength of the cross-section, per Chapter C3 of AISI/COS/NASPEC 2001, using the appropriate strength reduction factor Φ and over-strength factor Ω. If the element violates the criteria, remove the element and redistribute the loads associated with the element per Section 3-2.4.3.

8-3.1.4 Connections.

Calculate design strengths for connections per AISI/COS/NASPEC 2001, using the appropriate strength reduction factor Φ and over-strength factor Ω. If the connection violates the criteria, remove it from the model. If both connections at the ends of an element fail, remove the element and redistribute the loads associated with the element per Section 3-2.4.3

8-3.2 Deformation Limits for Cold-Formed Steel.

The Deformation Limits are given in Table 8-3. Note that Table 8-3 does not contain deformation limits for connections; thus, the deformation limits are applied only to the structural elements.

Table 8-3 Deformation Limits for Cold-Formed Steel

	AP for Low LOP		AP for Medium and High LOP	
Component	**Ductility (μ)**	**Rotation, Degrees (θ)**	**Ductility (μ)**	**Rotation, Degrees (θ)**
Girts and Purlins	5	5	2	2
Metal Studs				
With studs connected top and bottom	3	2	1.8	1.3
With sliding connection	1	-	0.9	-
Corrugated Metal Deck	6	4	3	2
Standing Seam Metal Deck	6	4	3	2

8-4 ADDITIONAL DUCTILITY REQUIREMENTS.

For MLOP and HLOP structures, design all perimeter ground floor columns and load-bearing walls such that the lateral uniform load which defines the shear capacity is greater than the load associated with the flexural capacity, including compression membrane effects where appropriate. Methods for calculating the compression membrane effects can be found in *Reinforced Concrete Slabs* and UFC 3-340-01.

APPENDIX A

REFERENCES

GOVERNMENT PUBLICATIONS:

1. National Bureau of Standards Washington, DC 20234	Report Number NBS-GCR 75-48 The Avoidance of Progressive Collapse: Regulatory Approaches to the Problem 1975
2. Federal Emergency Management Agency 500 C Street, SW Washington, DC	FEMA 350 Recommended Seismic Design Criteria for New Steel Moment-Frame Buildings 2000 FEMA 356 Prestandard and Commentary for the Seismic Rehabilitation of Buildings 2000
3. General Services Administration Washington, DC	Draft, Progressive Collapse Analysis and Design Guidelines for New Federal Office Buildings and Major Modernization Projects 2003
4. International Code Council 5203 Leesburg Pike, Suite 600 Falls Church, VA 22041	International Building Code 2003
5. US Army Corps of Engineers Protective Design Center Omaha District 215 N. 17th St. Omaha, NE 68102-4978	Department of Defense Interim Antiterrorism/Force Protection Construction Standards, Guidance on Structural Requirements 2001
6. Department of Defense Washington, DC	UFC 3-340-01 Design and Analysis of Hardened Structures to Conventional Weapons Effects 2002 UFC 4-010-01 DoD Minimum Antiterrorism Standards for Buildings 2002

UFC 4-020-01 Security Engineering Planning Manual
In Preparation

UFC 4-013-01 Security Engineering: Structural Design to Resist Explosives Effects for New Buildings
In Preparation

UFC 4-013-02 Security Engineering: Structural Design to Resist Explosives Effects for Existing Buildings
In Preparation

NON-GOVERNMENT PUBLICATIONS:

1. American Concrete Institute P.O. Box 9094 Farmington Hills, MI 48333-9094	ACI 318-02, Building Code Requirements for Structural Concrete 2002
	ACI 530-02 Building Code Requirements for Masonry Structures 2002
2. American Forest & Paper Association American Wood Council 1111 19th Street NW, Suite 800 Washington, DC 20036	Load and Resistance Factor Design Manual for Engineered Wood Construction 1996
3. American Institute of Steel Construction One E. Wacker Dr., Suite 3100 Chicago, IL 60601-2000	Manual of Steel Construction, Load and Resistance Factor Design 2003
	AISC 341-02 Seismic Provisions for Structural Steel Buildings 2002
4. American Iron and Steel Institute 1101 Seventeenth Street NW Suite 1300 Washington, DC 20036-4700	AISI Standard North American Specification for the Design of Cold-Formed Steel Structural Members 2002
5. American Society of Civil Engineers	ASCE 7-02 Minimum Design Loads for

1801 Alexander Bell Drive Reston, VA 20191-4400	Buildings and Other Structures
6. Building Research Establishment Bucknalls Lane Garston, Watford WD25 9XX England	Multi-storey Timber Frame Buildings, A Design Guide 2003
7. British Standards Institution 389 Chiswick High Road London W4 4AL England	BS 5628-1:1992 Code of Practice for Use of Masonry, Part 1: Structural Use of Unreinforced Masonry 1993
	BS 5950-1:2000 Structural Use of Steelwork in Building, Part 1: Code of Practice for Design--Rolled and Welded Sections 2001
	BS 8110-1:1997 Structural Use of Concrete, Part 1. Code of Practice for Design and Construction 1998
8. National Institute of Building Sciences Rosemont, Illinois	National Workshop on Prevention of Progressive Collapse The UK and European Regulations for Accidental Actions, D. B. Moore 2002
9. MacMillan Press Ltd, Houndmills, Basingstoke, Hampshire England	Plastic Methods for Steel and Concrete Structures S.J. Moy 1996
10. Prentice Hall, Inc. Upper Saddle River, New Jersey	Reinforced Concrete: A Fundamental Approach E.G. Nawy 2000

11. John Wiley and Sons, Inc
New York, New York

Plastic Design of Steel Frames
L. R. Beedle
1966

The Plastic Methods of Structural Analysis
B.G. Neal
1963

Reinforced Concrete Slabs
R. Park and W.L. Gamble
1999

Inelastic Behavior of Load-Carrying Members
J.A. Smith and O.M. Sidebottom
1965

12. Van Nostrand Reinhold Company
New York, 1971

Applied Plastic Design in Steel
R.O. Disque
1971

APPENDIX B

COMMENTARY

B-1 INTRODUCTION.

The goal of these design requirements is to provide a rational and uniform level of resistance to progressive or disproportionate collapse in new and existing DoD structures. These requirements are threat-independent and are not intended to provide resistance to the local damage that may initiate the progressive collapse. Structural hardening of conventional structures to resist specific threats is covered in UFC UFC 4-013-01 *Structural Design to Resist Explosives Effects for New Buildings* and UFC 4-013-02 *Structural Design to Resist Explosives Effects for Existing Buildings*.

As suggested by Ellingwood and Leyendecker 1977, this UFC employs a “combined approach”, in which Indirect Design is used for “normal” buildings by specifying minimum levels of strength, ductility, redundancy, and continuity. If the building is “unusual” or the consequences of a progressive collapse event are severe, then explicit consideration of the resistance to progressive collapse must be considered through a Direct Design approach. This combined approach is thought to add minimal expense while significantly improving the ability of structures to resist progressive collapse. The British employ a similar combined approach in their Building Standards.

In this UFC, different levels of design requirements are specified, depending upon the facility's required Level of Protection (LOP). Following the procedure laid out in UFC 4-020-01 *Security Engineering Facility Planning Manual*, the Project Planning team determines the LOP, which is a measure of the asset value of the facility and reflects the number of occupants, mission criticality, as well as other factors. It is noted that the LOP is a threat-independent quantity. A Very Low LOP (VLLOP) or Low LOP (LLOP) corresponds to buildings that are "normal"; Medium LOP (MLOP) and High LOP (HLOP) correspond to “unusual” structures. Likewise, the British have recently proposed the addition of a risk/consequence approach to their Building Standards, to specify a level of progressive collapse design that reflects the value and vulnerability of each structure.

B-2 DESIGN REQUIREMENTS.

For Indirect Design in VLLOP and LLOP structures, "Tie Force" requirements are specified in this UFC. Tie Forces are the tensile capacities provided by the structural elements and connections and are intended to keep the columns vertical and to transfer loads from damaged portions of the structure to un-damaged sections. For MLOP and HLOP structures, both Indirect Design (Tie Forces) and Direct Design (Alternate Path method) are required. In the Alternate Path method, the designer must verify that the structure can bridge over a removed structural element. Additional details and background on Tie Forces and the Alternate Path method are provided later.

It is important to note that many, if not most, DoD structures will fall in the VLLOP and LLOP categories. The required Tie Forces are generally easy to provide in reinforced concrete and structural steel construction; simple spreadsheet calculations will be sufficient and little additional design effort will be required. Developing the required Tie Force capacities in masonry, wood frame and cold-formed steel structures may require more effort, as many standard connections and member configurations are not sized to carry these tensile loads. Design and analysis effort will be required on the part of the engineer to develop connection designs that can provide the Tie Force capacities for these types of structures. Some guidance is given in Appendices E and F for connections in wood frame and masonry structures; additional information on connection design is available from vendors and design code bodies.

Finally, for the purposes of this UFC, it is recognized that the structural configurations typically employed for both wood frame and cold-formed steel are very similar, as cold-formed steel construction typically consists of thin wall steel studs and horizontal members, sheathed with gypsum board or wood-product panels. Thus the requirements for, and approach to, progressive collapse design for these two materials are essentially identical.

B-3 TIE FORCES.

The Tie Force requirements within this UFC are very similar to those provided in the British Building Standards for reinforced concrete, structural steel, and masonry and have only been marginally modified to make clearer some of the connection and continuity issues.

The British Tie Force requirements were developed in response to the Ronan Point accident in 1968. The steel and reinforced concrete requirements are different in form and magnitude and appear to have been developed by separate code writing bodies (as with ACI and ASCE in the United States). The masonry requirements are almost identical to reinforced concrete, with the exception of the additional requirements for developing full vertical ties (Table 7-1). Attempts to uncover the processes and logic by which these requirements were developed were partially successful and, in discussions with British engineers, it has been noted that engineering judgment was used for some of the requirements. The results of the background research are presented in the following sections.

It is noted that the British Tie Force requirements are adopted almost verbatim in this UFC and it has been assumed that they are directly applicable to US construction, i.e., that there is sufficient similarity between current British and US construction practices that the Tie Force requirements can be applied to US construction. Additional research and analysis are needed to determine if a new or modified set of Tie Force requirements should be developed. However, the Tie Force requirements presented in this UFC have been effective for the British over the last 3 decades and are the most prescriptive procedure available for Indirect Design. In lieu of additional research and analysis, they are deemed to be sufficient for DoD construction.

B-3.1 Reinforced Concrete Tie Forces.

A review of the 1972 British Standard Code of Practice CP110 is provided in Burnett 1975 who discusses the origins or logic used to develop the reinforced concrete tie force requirements. The British Buildings Standards have evolved somewhat since this time, but the basic approach and most of the requirements are the same today.

B-3.1.1 Internal Ties.

B-3.1.1.1 Upper Limit of the Basic Strength.

In SI units, the equation for internal tie forces is:

a) $\frac{(1.0D + 1.0L)}{7.5} \frac{l_r}{5} F_t$ (kN/m)

or

b) $1.0\ F_t$ (kN/m)

where:

D	=	Dead Load (kN/m^2)
L	=	Live Load (kN/m^2)
l_r	=	Greater of the distances between the centers of the columns, frames or walls supporting any two adjacent floor spaces in the direction of the tie under consideration (m)
F_t	=	"Basic Strength" = Lesser of $(20 + 4\ n_o)$ or 60
n_o	=	Number of stories

Burnett indicates that the upper limit of F_t (60) can be derived from two scenarios. First, this magnitude is equivalent to the internal member force created by catenary action of the floor after an intermediary load-bearing element is removed, as shown in Figure B-1, assuming a sag of 10%. Second, the upper limit of F_t can be related to the forces applied to a typical wall panel loaded with a 34 kN/m^2 (5 psi) static pressure, which is notionally equivalent to the overpressure that was thought to exist in the Ronan Point gas explosion. Discussions with British engineers suggest that the first approach (catenary action) is the mechanism that the internal tie forces were intended to resist.

The determination of l_r for framed and spine wall construction are demonstrated in Figures B-2 and B-3, respectively.

Figure B-1 Calculation of Upper Bound on the Basic Strength

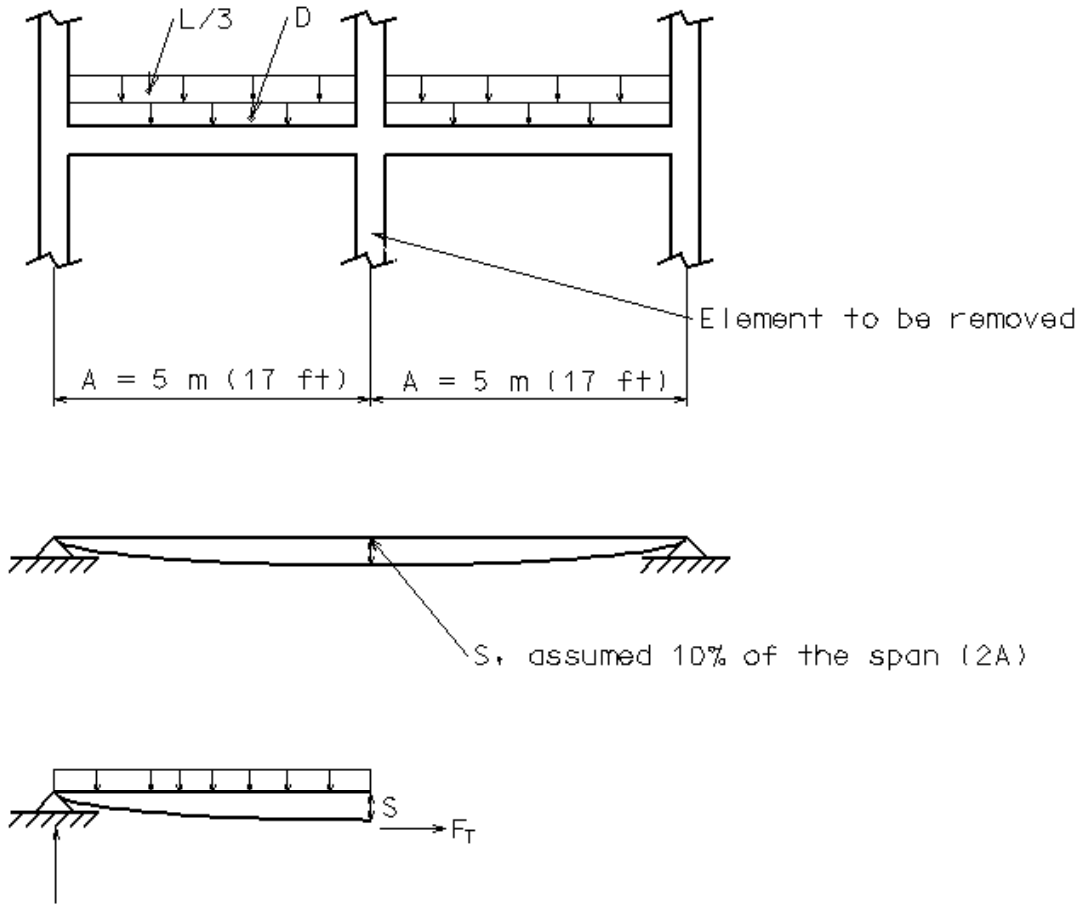

$$\sum M = F_T * S = \frac{(D + \frac{L}{3})}{8} * (2A)^2 \qquad F_T = \frac{(D + \frac{L}{3}) * A^2}{2S}$$

Typical British Construction circa 1970:

A=5 m (17 ft)
S=A/5
D=3.6 kN/m^2 (75 psf)
L=3.6 kN/m^2 (75 psf)

Thus, F_t=60 kN/m (4.1 kip/ft or 13.5 kip/3.3-ft)

Figure B-2 Determination of l_r for Frame Construction

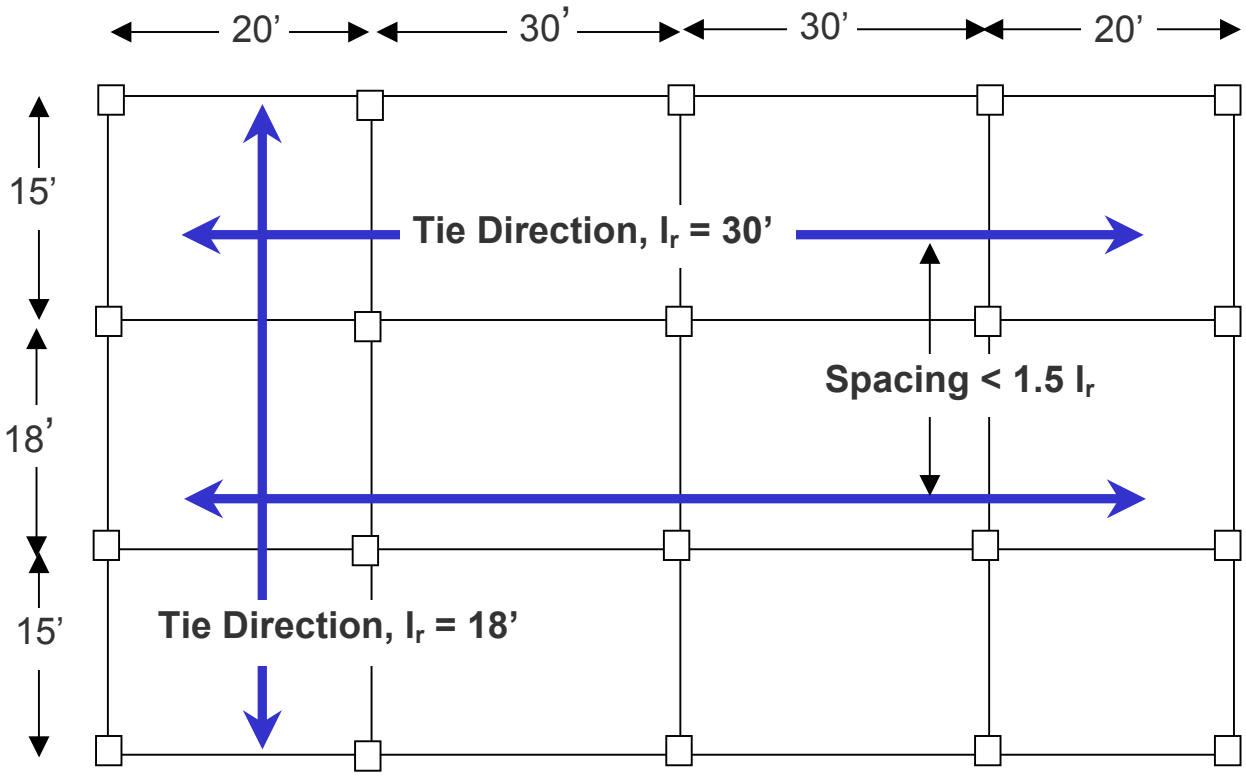

Figure B-3 Determination of l_r for Spine Wall Construction

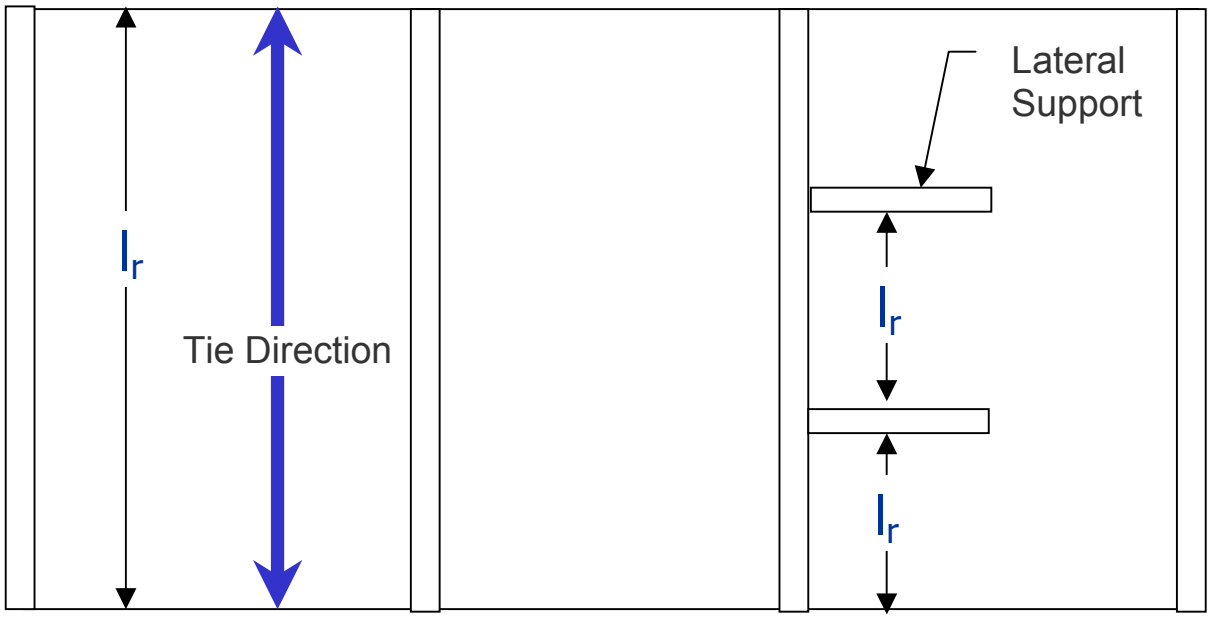

B-3.1.1.2 Basic Strength.

The Basic Strength, F_t, is a function of the number of stories, which, according to Burnett 1975, "reflects that the probability of occurrence of an abnormal loading increases with building height". Discussions with British engineers suggest that the dependence on number of stories was imposed to provide a smooth transition between 5 stories, where tying was not required, and 10 stories where the maximum value was required.

B-3.1.1.3 Scaling Factors.

In requirement a) above, the factors 7.5 and 5 are scaling factors, to account for larger loads and spans. The 7.5 factor reflects the typical Dead plus Live Load value (7.2 kN/m^2 or 150 psf) that was in effect in Britain at the time CP110 was instituted. The 5 factor reflects the typical span length of 5 m (16.4 ft). Lastly, it is noted that un-factored loads are used to scale the internal tie forces.

B-3.1.2 Peripheral Ties.

The peripheral ties are intended to keep the perimeter of the building together and must be located in the walls or within 1.2 m (3.9 ft) of the building edges. It has also been conjectured that a main purpose of the peripheral ties is to provide a means to anchor the internal ties.

As suggested in Burnett 1975, Figure B-4 presents two details for effectively anchoring internal tie bars to peripheral tie bars; Figure B-5 presents a peripheral tie detail for corner columns. Obviously, there are numerous other ways to achieve anchorage of internal and peripheral ties.

Figure B-4 Details for Anchoring Internal Ties to Peripheral Ties

Figure B-5 Peripheral Tie Detail for Corner Columns

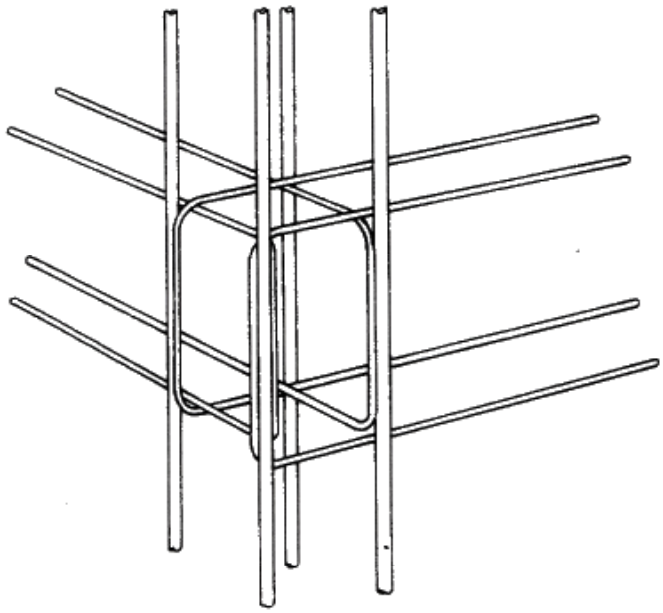

B-3.1.3 Horizontal Ties to External Columns and Walls.

In SI units, the equation for horizontal tie forces to external columns and walls is:

a) the lesser of 2.0 F_t or (l_s/2.5) F_t (kN)

or

b) 3% of the largest factored vertical load carried by the column or wall at that level (kN)

where: l_s = the floor to floor height (m).

The justification for these values appears to be engineering judgment as to the forces that are required to keep a column or wall vertical (i.e., minimizing the possibility of a large P-Δ effect). Note that the second portion of requirement a) is scaled by the floor to floor height, to account for larger story heights; 2.5 m was a typical British floor height.

B-3.1.4 Vertical Ties.

As stated in the UFC, each column and each load-bearing wall must be tied continuously from the lowest to the highest level. The tie must have a required strength in tension equal to the maximum factored sum of the Dead and Live Load received by

the column or wall from any one story. The justification of this is straightforward: if the column section at a floor level is not supported by the column below that floor level, then it must be able to carry in tension the dead and live load applied by the floor. As discussed with British engineers, this allows the loads to be redistributed up the building in catenary or Vierendeel action.

B-3.1.5 Definition of Lateral Support for Load-bearing Reinforced Concrete Walls.

As described in the footnote of Table 4-2, lateral supports are defined, using the definition of F_t in Section 4-2.5, as:

1) a stiffened section of the wall not exceeding 1.0 m (3.3 ft) in length, capable of resisting a horizontal force of 1.5 F_t, in kN per meter height of the wall (0.45 F_t in kips per foot height of wall), or,

2) a partition of mass not less than 100 kg/m^2 (20.6 lb/ft^2) at right angles to the wall and so tied to it as to be able to resist a horizontal force of 0.5 F_t, in kN per meter height of the wall (0.15 F_t in kips per foot height of wall).

Figures B-6 and B-7 are schematics of these definitions.

Figure B-6 Lateral Support For Stiffened Sections

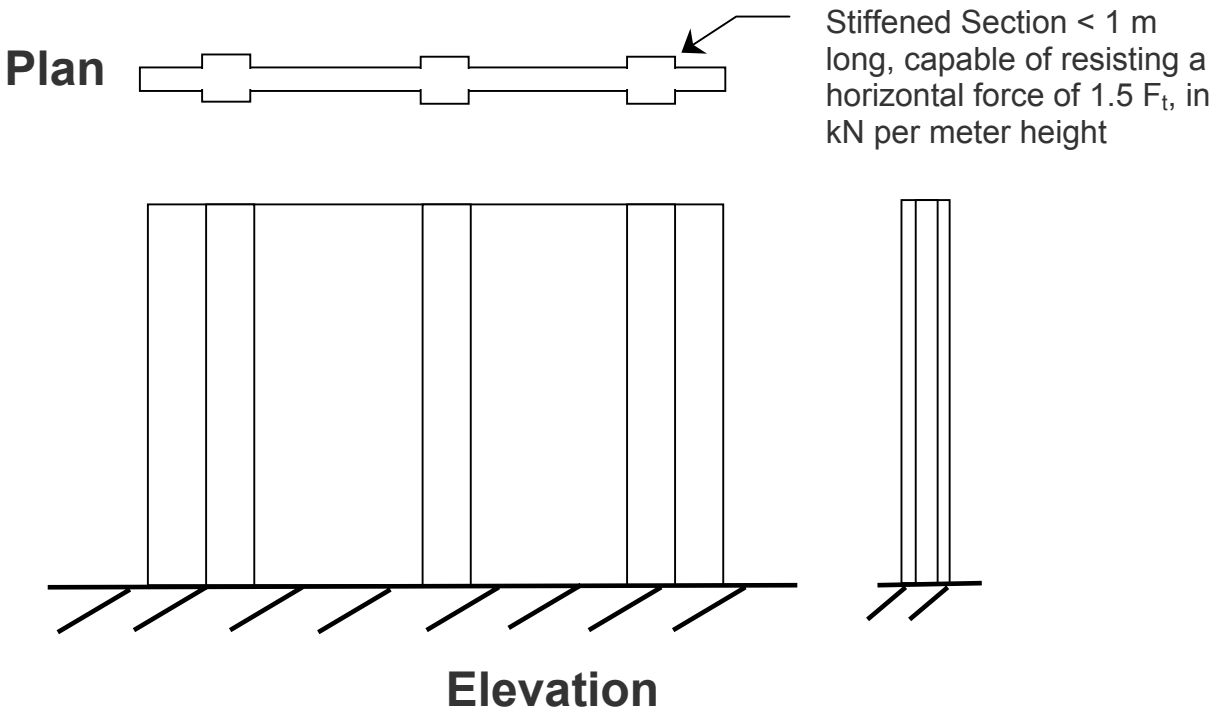

Figure B-7 Lateral Support For Partition Walls

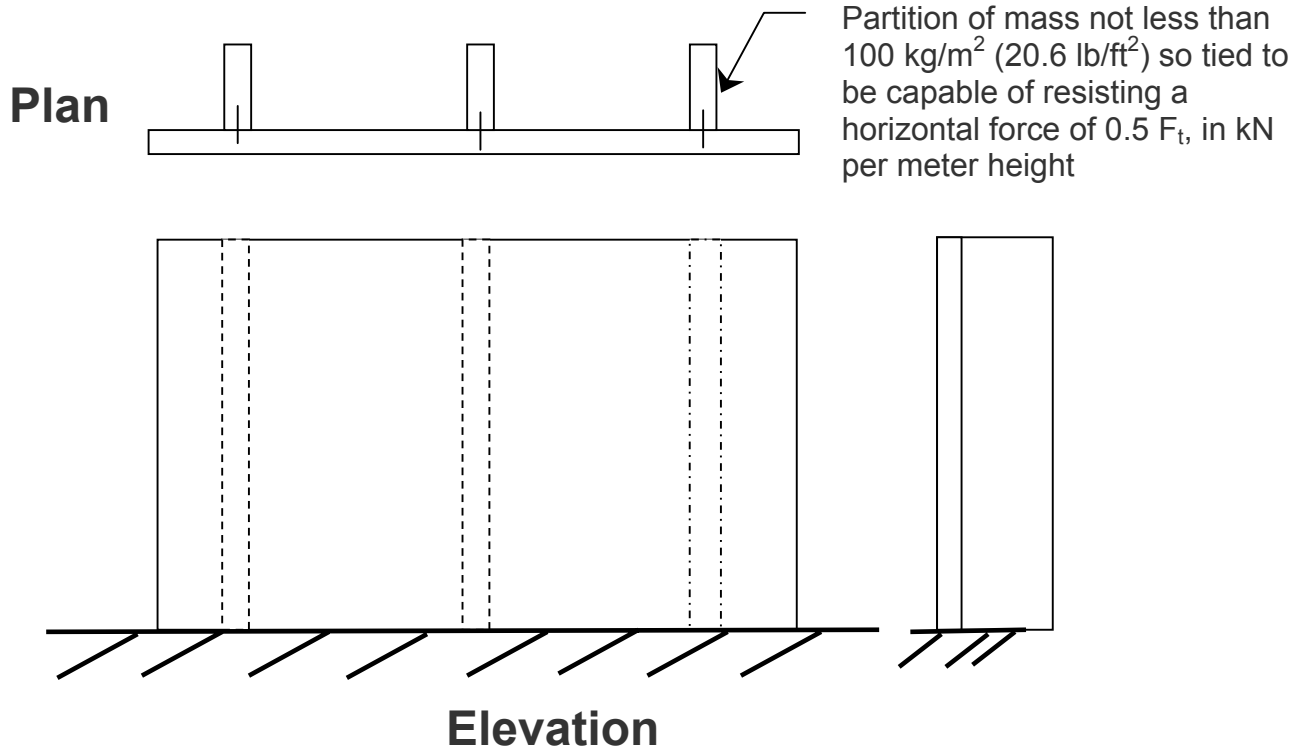

B-3.2 Steel Tie Forces.

In Burnett 1975, the review of the British Tie Force requirements was limited to reinforced concrete. Similar details for steel design were not uncovered in development of this UFC.

The tie force requirements for steel are often different from reinforced concrete; this is not surprising given that separate organizations generated the steel and concrete building standards. For steel tie forces, a "basic strength" as a function of building height is not used. The loads used to determine the horizontal steel tie forces are based on factored loads, whereas the upper limit on the basic strength and the scaling of the concrete tie forces are based on un-factored loads. Also, the vertical tie forces for steel are based on factored loads whereas un-factored loads are used for reinforced concrete. For both steel and reinforced concrete, the horizontal ties to external columns are based on factored loads; however, 3% is used for reinforced concrete and 1% is used for steel. Finally, the lower limit on the internal steel tie force of 75 kN (16.9 kips) is slightly different from the lower limit of 60 kN (13.5 kips) for reinforced concrete.

B-3.3 Masonry Tie Forces.

The tie force requirements for masonry are taken from the British Standards and are very similar to reinforced concrete, with some small modifications and

clarifications. As with reinforced concrete, some work is needed to evaluate these tie forces relative to US and DoD construction.

As described in the footnote of Table 6-2, lateral supports are defined, using the definition of F_t in Section 6-2.4, as:

1) An intersecting or return wall tied to a wall to which it affords support, with connections capable of resisting a force of F_t in kN per meter height of wall (0.45 F_t in kips per foot height of wall), having a length without openings of not less than H/2 at right angles to the supported wall and having an average weight of not less than 340 kg/m^2 (70 lb/ft^2).

2) A pier or stiffened section of the wall [not exceeding 1 m (3.3 ft) in length], capable of resisting a horizontal force of 1.5 F_t kN per meter height of wall (0.45 F_t in kips per foot height of wall).

3) A substantial partition at right angles to the wall having an average weight of not less than 150 kg/m^2 (30.9 lb/ft^2), tied with connections capable of resisting a force of 0.5 F_t kN per meter height of wall (0.15 F_t in kips per foot height of wall) and having a length without openings of not less than H at right angles to the supported wall

Figures B-8 through B-10 are schematics of these definitions.

Figure B-8 Lateral Support For Intersecting or Return Walls

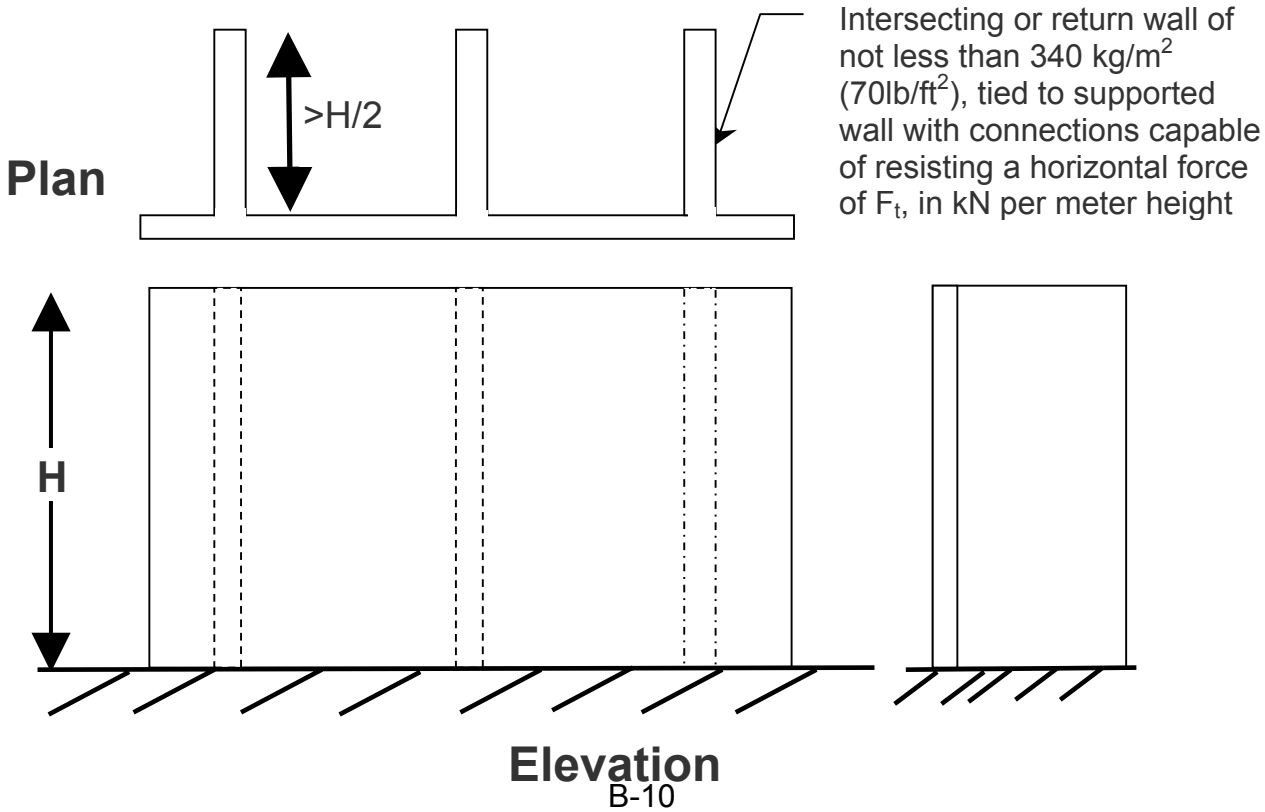

Figure B-9 Lateral Support For Piers or Stiffened Sections

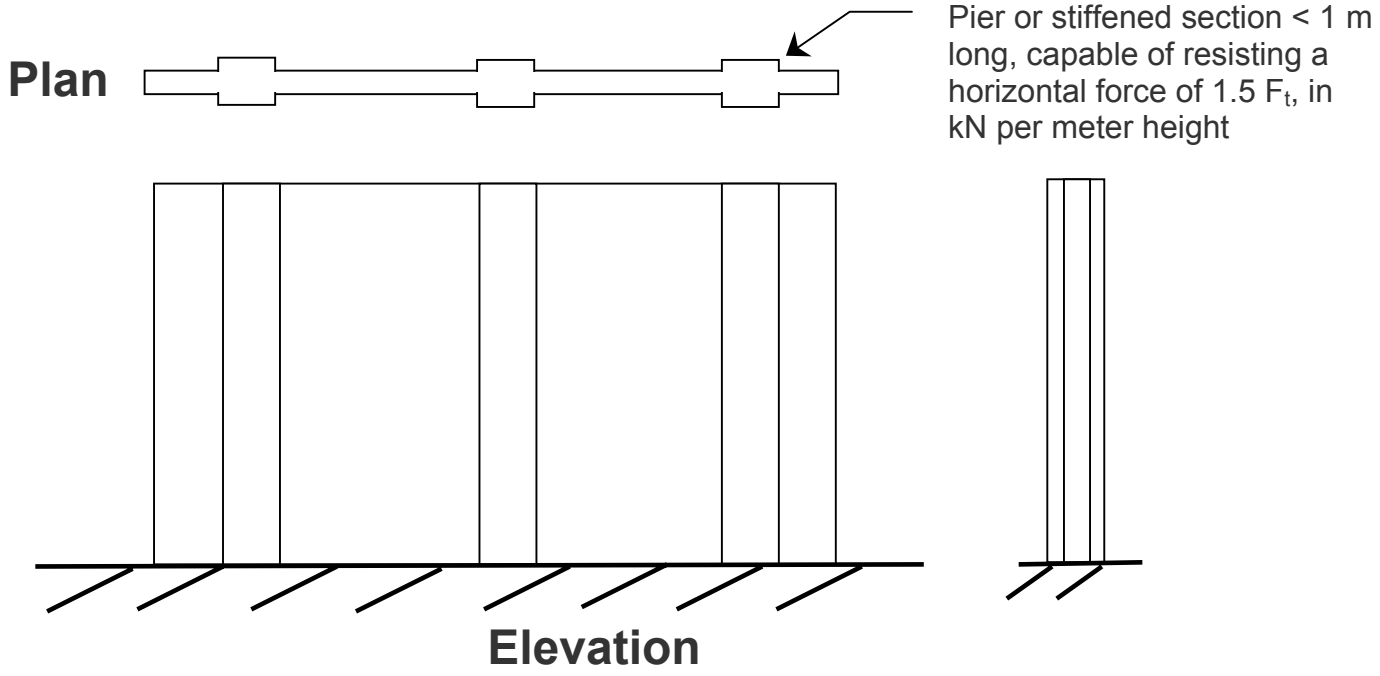

Figure B-10 Lateral Support For Substantial Partitions

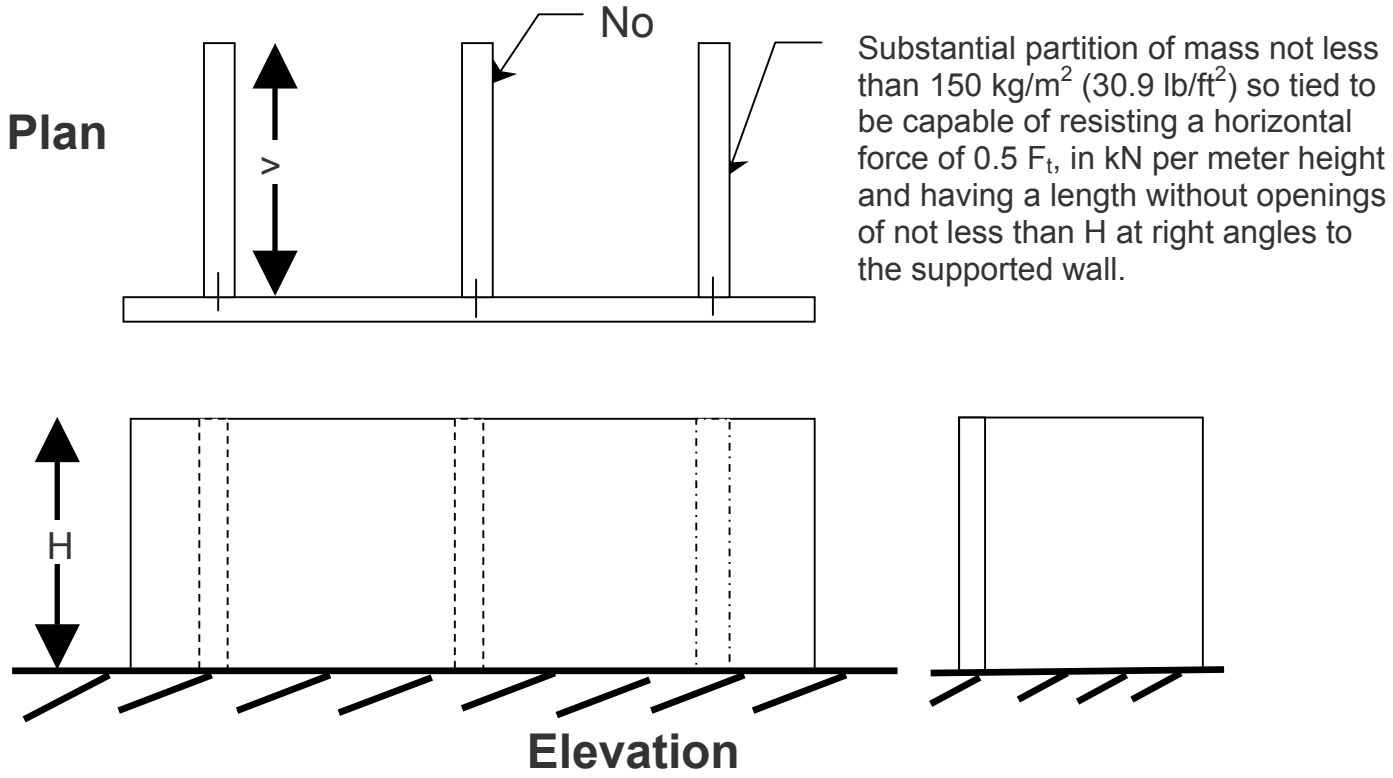

B-3.4 Wood Frame Tie Forces.

The British do not provide explicit Tie Force requirements for wood frame construction. However, the British provide some guidance for timber construction in BRE 2003, which states that: "The regulations suggest high tie forces to take account of the typical wide spacing of post and beam structures using steel or concrete materials. While these tie forces could be designed to spread through the timber frame elements it is not considered a practical option, although not impossible." BRE 2003 goes on to state that the Alternate Path method "…provides the appropriate route for platform timber frame structures" and guidance on the length of the removed members is provided. Additional details on the AP method for wood are provided later in this appendix and in Appendix E.

In this UFC, Tie Force requirements for wood frame (and cold-formed steel) are specified in a similar manner to those for reinforced concrete and masonry, since all four types of structures rely on load-bearing walls, posts, and columns and share a number of similar connection and floor configurations. The differences are in the values for the upper limit of F_t (the "Basic Strength"), the constants in the equation defining F_t as a function of the number of stories, and the scaling values for the internal tie strength in Section 7-2.4.2. These are based on a similar analysis as shown in Section B-3.1.1.1 and Figure B-1. In this case, typical values for American light frame wood construction were used: Dead Load = 0.72 kN/m^2 (15 psf), Live Load = 2.39 kN/m^2 (50 psf), and span A = 4.6 m (15 ft), resulting in an upper limit of F_t = 21.9 in SI units and 4.92 in English units. Note that the constants in the equation for the Basic Strength as a function of the number of stories have been scaled from that for concrete and masonry, to give the correct upper limit.

Full scale testing by Building Research Establishment Ltd. (BRE) and TRADA in the U.K. showed exceptional performance of a six-storey wood frame building. The overall testing of wood frame construction was called Timber Frame 2000. The testing included an evaluation of the building's resistance to disproportionate collapse as required by U.K. building regulations. The testing for disproportionate collapse included the removal of a section of load-bearing wall in the corner of a perimeter wall and the removal of a section of interior load-bearing wall. In both cases, the deflections were limited and the building showed excellent resistance to disproportionate collapse. Although differences may exist between typical wood frame construction in the U.K. and the U.S., this testing is still the most relevant data available on the performance of wood frame structures with respect to disproportionate collapse. For this reason, the experience gained in the U.K. is used heavily in this UFC. Design and best practice guidance developed based on the results of this test entitled, "*Multi-storey timber frame buildings: a design guide*" is available from BRE at www.brebookshop.com/. The best practices guide indicates the bridging approach is the "appropriate route for platform timber frame structures" and provides guidance on the length of notional member to be removed.

B-3.5 Cold-formed Steel Tie Forces.

As cold-formed steel construction is similar to wood frame, identical tie force requirements are used. These values might be adjusted in the future, with additional research and analysis,

B-4 ALTERNATE PATH METHOD.

The Alternate Path methodology provided in this UFC is a combination of two existing approaches, presented in ITG 2001 and GSA 2003. There are some modifications, most notably in the Deformation Limits for some of the materials, as discussed later.

As the description of the AP method in the UFC is straightforward, only significant topics or changes from existing guidance are discussed in the following sections.

B-4.1 Removal of Load-Bearing Elements.

As discussed in the UFC, the AP method for MLOP and HLOP requires that load-bearing elements be removed from every floor, after their plan location is identified. The main motivation for this requirement is that DoD facilities could be attacked with artillery, rockets, mortars, or rocket propelled grenades, all of which could damage a structure at upper floors. Many buildings are more susceptible to progressive collapse if the damage initiates at higher elevations (due to the reduced reserve capacity from the fewer number of floors above) and this requirement will motivate the designer to distribute additional strength and ductility to the upper levels.

For some multi-story structures, the results of the AP analyses will indicate that similar responses are expected for element removal at a range of floors. If the designer performs AP analyses for a lower floor and a higher floor and can show that the intermediate floors will have similar results, the intermediate floors do not have to be analyzed. However, this conclusion must be documented and provided as part of the engineering analysis.

Finally, as shown in Figure 3-4, the column or wall is removed from the structural model without degrading the capabilities of the joint at the upper end of the member. Physically, this is unlikely to happen in an accidental or man-made event and critics of this approach usually refer to the column deletion as the “immaculate removal.” However, it should be emphasized that the AP method is not intended to replicate an actual event; the goal is to verify that the structure has satisfactory flexural resistance to allow bridging across an area with localized damage.

B-4.2 Factored Loads for Alternate Path Method.

B-4.2.1 Dynamic Load Case.

The load case in Section 3-2.4.1 is taken from ASCE 7-02, Section C2.5, "Load Combinations for Extraordinary Events." ASCE 7-02 states that “For checking a structure to determine its residual load carrying capacity following occurrence of a damaging extraordinary event, selected load-bearing elements should be notionally removed and the capacity of the remaining structure evaluated” using the load combination in Section 3-2.4.1.

B-4.2.2 Static Load Case.

The factor of 2.0 acting on the Dead, Live and Snow Loads in Section 3-2.4.2 is used to account for the localized inertial effects due to the loss of vertical support over a short, finite period of time. The factor 2.0 is used in GSA 2003 and has been validated as conservative through a number of numerical simulations of progressive collapse.

The increased loads are only applied to the bays adjacent to and above the removed load-bearing element, as detailed in Section 3-2.4.2. The increased loads are limited to these areas as they are most likely to experience significant inertial loading, whereas the rest of the structural will experience much smaller motion.

B-4.2.3 Loads Associated with Failed Elements.

When an element fails, the element's load must be transferred to the rest of the structural model. For Nonlinear and Linear Static analysis, the loads applied above the removed column or wall are doubled to account for inertial effects that can't be represented in a static solution. As these loads are already increased by a factor of 2.0, they are redistributed, without increase, to the structure below, over an area that is equal to or smaller than the loaded area that the failed element was supporting.

For Nonlinear Dynamic analysis, the entire structure is loaded as detailed in Section 3-2.4.1, without the factor of 2 that is used in Static analysis for the structural areas above the removed element. However, for Nonlinear Dynamic analysis, the loads from a failed element are doubled before being applied to the area below, to grossly account for the effect of structural elements falling upon other elements. The load is applied instantaneously, as is the removal of the structural element, which may induce significant dynamic response in the structure. The choice of 2.0 is based on engineering judgment. While the peak loads in a perfect impact will be much higher than 2.0, it is unlikely that elements will fail completely and fall intact upon the lower level. It is more likely that the element will be partially restrained, e.g. with rebar that is still embedded in the concrete, shear connectors between floor systems and beams, non-load-bearing walls, and other non-structural elements.

B-4.3 Damage Limits.

The Damage Limits given in Section 3-2.6 were taken from ITG 2001 and similar values are used by the British.

B-4.4 Plastic Hinge Considerations for AP Modeling of Steel Structures.

Since an AP analysis that assumes plastic behavior is likely to experience large deformations and potentially the formation of multiple plastic hinges, the analysis is for all intents and purposes a plastic analysis or design even though a complete mechanism may not be reached. Therefore, it is appropriate to employ the AISC provisions for plastic analysis and design. The plastic analysis provisions are found in AISC LRFD 2003 Section A5.1.

An element with a compact section is capable of reaching the full plastic moment capacity (if adequately braced), however a compact section may not be sufficient if the plastic hinge must sustain significant rotations following hinge formation. See AISC LRFD 2003 Commentary B5 and AISC 341-02 Section C8.2 for a discussion of preventing local buckling for various levels of rotation capacity and member ductility factor (specific definitions of rotation capacity and ductility factor are provided in AISC LRFD 2003 in the glossary). For higher levels of inelastic rotation, it may be necessary to use a "seismically compact" section in accordance with AISC LRFD 2003 Table C-B5.1 and AISC 341-02 Table I-8.1.

In addition, lateral bracing requirements for plastic analysis are more severe and are required due to the large deformations possible in this type of behavior. Although not specifically covered in the AISC provisions, the analyst must also consider other load effects and their impact on the plastic moment capacity. For example, a section with an applied compressive axial force will have a reduced plastic moment since some of the cross section will be utilized to resist the axial force. This reduction is small in many cases, but the effect should be verified before assuming a full plastic moment is achievable. Beedle 1958 indicates the axial effect can be ignored for $P/P_y < 0.15$ with small error in the value of M_p. Moy 1996, Neal 1963, and Beedle 1958 cover the effect of such "secondary" effects in detail.

B-4.5 Beam-Column Considerations for AP Modeling of Steel Structures.

A determination must be made for a beam-column element on whether the response will be deformation controlled and allow for inelastic action or if the response will be force controlled and the element becomes ineffective when the limit state is reached. Since any beam element may have some amount of axial force, most elements will be treated as beam-columns. If the axial force is low (P/P_y) and the element is adequately braced, the response is not greatly affected by the presence of the axial force and the element can be treated as a flexural element. However, as the axial force increases, the response can be altered. It is worth noting that “strong column, weak beam” design as specified for seismic design is appropriate when considering progressive collapse as well. Early hinge formation in columns would tend to reduce the resistance to progressive collapse and should be avoided. By ensuring

that hinging of columns occurs last, the capacity of the structure to resist collapse can be maximized. It is also likely that the "Effective Column Height" requirement in Section 2-2.1 will lead to stronger columns and less demand for inelastic action of the columns in resisting progressive collapse. However, since in some cases beam-columns with significant axial forces may be encountered, there should be provisions to model the response of these elements.

B-4.5.1 Nonlinear Analyses of Beam-Columns.

FEMA 356 provides modeling parameters for nonlinear analyses of columns with axial force and bending moment. The rotational parameters/limits are based on cross sectional properties and the ratio of P_{UF}/P_{CL} (P_{CL} would be taken as ϕP_n for use with this UFC; P_{UF} will be taken as the axial force in the member computed in accordance with the loading specified in 3-2.4.1 or 3-2.4.2 as appropriate). If P_{UF}/P_{CL} is less than 0.5, the member is assumed to be deformation controlled. If the ratio is greater than 0.5, the member is taken as force controlled. Since P_{CL} takes into account the potential limit states associated with column behavior and the parameters are further determined based on cross sectional properties, FEMA 356 was judged the best reference for determining modeling parameters for beam-columns in this UFC. FEMA 356 was also prepared as a consensus document, further warranting its use for this purpose. At this time, it is not possible to determine how the parameters given in FEMA 356 would be adjusted for the type of response and loading associated with progressive collapse compared to seismic loading and response. The parameters may be different since the parameters used in FEMA 356 are based on backbone curves derived from pushover curves. However, it is believed that the values are conservative and valid for use in the context of this UFC until further research can be completed.

References that may be useful for modeling and determining the response of beam-column elements in the inelastic range include Beedle 1958, *Inelastic Behavior of Load-Carrying Members* by Smith and Sidebottom (Smith and Sidebottom 1965), and the *Applied Plastic Design in Steel* by Disque (Disque 1971). The latter reference has moment rotation curves and column design charts with axial-moment interaction for columns with applied end moments in single or double curvature

B-4.5.2 Linear Analyses of Beam-Columns.

Since the linear procedures in this UFC include the insertion of equivalent plastic hinges, they are not compatible with the linear procedures developed in FEMA 356. Therefore the acceptance criteria utilized in FEMA 356 for linear procedures are not applicable for this UFC.

Also, since "expected" or "lower-bound" strengths are not used in this UFC, both capacities required for using FEMA 356 are calculated using the material properties specified in this UFC. Further, the appropriate strength reduction factors Φ and the over-strength factor Ω should be utilized in accordance with this UFC when using FEMA 356. References to AISC LRFD in FEMA 356 will be taken as the latest edition when used in conjunction with this UFC.

B-4.5.3 Connections and Beam-Columns.

Partially restrained connections can be modeled in both linear and nonlinear analyses in accordance with the provisions of FEMA 356. The methods of FEMA 356 and 350 provide a way to verify the performance of standard shear connections of secondary structural members that are attached to the primary members associated with the response in progressive collapse analysis.

B-4.6 Deformation Limits.

B-4.6.1 General.

The majority of the Deformation Limits given in the UFC were provided by the Protective Design Center of the Omaha District of the US Army Corps of Engineers. These values were derived from tests and analysis and their application is straightforward. The following sections describe those portions of the Deformation Limits that bear further discussion.

B-4.6.2 Reinforced Concrete Deformation Limits.

As shown in Table 4-4, the Deformation Limits for slabs and beams depend upon the tension membrane effect, which is an extension of the yield line theory of slabs, acting to increase the ultimate resistance. Guidance for calculating the tension membrane response is provided in Park and Gamble 1999 and UFC 3-340-01.

Also, as noted in the UFC, Table 4-4 does not contain deformation limits for connections. Per FEMA 356, monolithic joints between beams and columns or walls are represented as rigid zones. Thus, the deformation limits are applied only to the structural elements.

B-4.6.3 Structural Steel Deformation Limits.

With the exception of the connection limits, the structural steel deformation limits in Table 5-3 were provided by the US Army Corps of Engineers Protective Design Center.

The values for the fully restrained and partially restrained connections for MLOP and HLOP were taken from GSA 2003. These values were developed by GSA based on the FEMA series of documents, with modifications to account for: the results of post-Northridge full-scale cyclic testing; corroborative nonlinear analyses performed by FEMA and others; and monotonic test results from Georgia Tech on riveted connections. The magnitudes were also modified to account for the fact that failure of only one or two connections can trigger a progressive collapse, whereas, in seismic engineering, the category of Life Safety permits the failure of up to 10-15% of the connections. The values for connection deformation limits for LLOP were derived from the MLOP/HLOP values by using the ratio of ductilities for Life Safety and Collapse Prevention from the FEMA values, i.e., the increase from MLOP/HLOP to LLOP is the same ratio as FEMA uses to go from Life Safety to Collapse Prevention.

Examples of partially restrained and fully restrained steel connections are listed in Table B-1 and shown in Figures B-11 and B-12. Figure B-13 presents two weak axis connections. Note that testing in accordance with Appendix S of AISC 341-02 can be used to verify and quantify the rotational capacities of connections that are not listed in Figures B-11 and B-12.

B-4.7 Time Effect Factor for Wood.

As discussed in AFPA/AWC "LRFD Manual for Engineering Wood Construction", the time effect factors, λ, were derived based on reliability analysis that considered variability in strength properties, stochastic load process modeling and cumulative damage effects. The time effect factors are applied to the reference strengths used in the code, which are based on short-term loading test values. Time effect factors range in value from 1.25 for a load combination controlled by impact loading to 0.6 for a load combination controlled by permanent dead load. Common building applications will likely be designed for time effect factors of 0.80 for gravity load design and 1.0 for lateral load design. Further ANSI/ASCE 16-95 indicates time effect factors of 0.7 when the live load in the basic gravity load design combination is for storage, 0.8 when the live load is from occupancy, and 1.25 when the live load is from impact. It is desirable that the structure is stable following local damage to allow for rescue operations and the installation of temporary shoring, however stability in the damaged state is not a permanent condition. Therefore a time effect factor greater than that associated with permanent occupancy and less than that associated with impact is warranted. For this reason and to avoid overly conservative values for such an extreme loading, a time effect factor of 1.0, consistent with the time effect factors used for gravity-lateral load combinations, is specified.

B-5 ADDITIONAL DUCTILITY REQUIREMENTS.

Additional ductility requirements are specified for all construction types, for structures with MLOP or HLOP. The main goal is to insure that the failure mode for all external columns and walls is flexural and ductile, rather than shear and brittle, by requiring that the shear strength exceed the flexural strength. As the flexural strength can often be increased by compression membrane effects under dynamic load, the engineer must consider this in determining the capacity of the columns and walls. Park and Gamble 1999 and UFC 3-340-01 provide guidance on compression and tension membrane effects.

For reinforced concrete columns, the shear capacity can be increased by simply increasing the number of column stirrups or by providing spiral reinforcement. Shear capacity can also be increased by adding external hoop reinforcement in the form of circular or square steel or composite jackets, which can be used as stay-in-place forms. For structural steel columns, the shear capacity can be enhanced by filling the section core with concrete and enclosing with steel plates. For masonry walls, fiber-impregnated polymer coatings can be applied to one or both surfaces.

Due to the numerous ways that ductility and shear strength can be enhanced, no specific guidance is given herein. However, the analysis and design approaches must be based on methods or data that are approved by the building owner.

Table B-1 Steel Moment Frame Connection Types (from GSA 2003)

Connection	Description	Type	Figure
Strong Axis			
Welded Unreinforced Flange (WUF)	**Full-penetration welds between beams and columns, flanges, bolted or welded web, designed prior to code changes following the Northridge earthquake.**	FR	B-11(a)
Welded Flange Plates (WFP)	**Flange plate with full-penetration weld at column and fillet welded to beam flange**	FR	B-11(b)
Welded Cover-Plated Flanges	**Beam flange and cover-plate are welded to column flange**	FR	B-11(c)
Bolted Flange Plates (BFP)	**Flange plate with full-penetration weld at column and field bolted to beam flange**	FR or PR	B-11(d)
Improved WUF-Bolted Web	**Full-penetration welds between beam and column flanges, bolted web, developed after Northridge Earthquake**	FR	B-11(a)
Improved WUF-Welded Web	**Full-penetration welds between beam and column flanges, welded web developed after Northridge Earthquake**	FR	B-11(a)
Free Flange	**Web is coped at ends of beam to separate flanges, welded web tab resists shear and bending moment due to eccentricity due to coped web developed after Northridge Earthquake**	FR	B-11(e)
Welded Top and Bottom Haunches	**Haunched connection at top and bottom flanges developed after Northridge Earthquake**	FR	B-11(f)
Reduced Beam Section	**Connection in which net area of beam flange is reduced to force plastic hinging away from column face developed after Northridge Earthquake**	FR	B-11(g)
Top and Bottom Clip Angles	**Clip angle bolted or riveted to beam flange and column flange**	PR	B-12(a)
Double Split Tee	**Split tees bolted or riveted to beam flange and column flange**	PR	B-12(b)
Composite Top and Clip Angle Bottom	**Clip angle bolted or riveted to column flange and beam bottom flange with composite slab**	PR	B-12(a) similar
Bolted Flange Plates	**Flange plate with full-penetration weld at column and bolted to beam flange**	PR	B-11(d)
Bolted End Plate	**Stiffened or unstiffened end plate welded to beam and bolted to column flange**	PR	B-12(c)
Shear Connection with or without Slab	**Simple connection with shear tab, may have composite slab**	PR	B-12(d)
Weak Axis			
Fully Restrained	**Full-penetration welds between beams and columns, flanges, bolted or welded web.**	FR	B-13(a)
Shear Connection	**Simple connection with shear tab**	PR	B-13(b)

Note: ***PR = Partially Restrained Connection***
FR = Fully Restrained Connection

Figure B-11 Fully Restrained Connections (from GSA 2003)

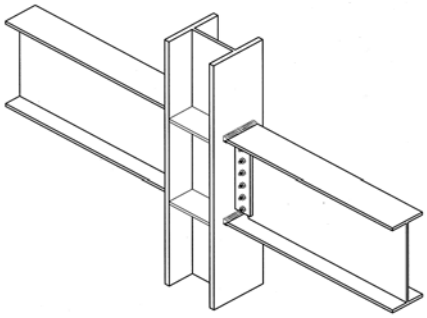

(a) WUF Fully Restrained Connection

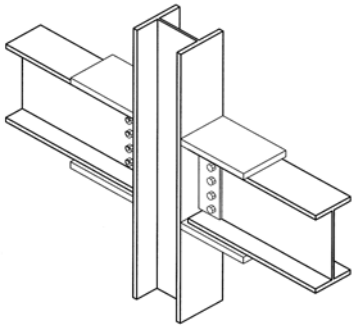

(b) Welded Flange Plate

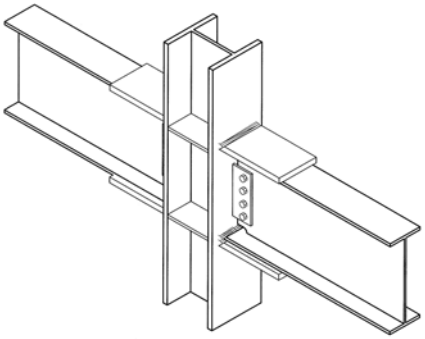

(c) Welded Cover Plated Flanges

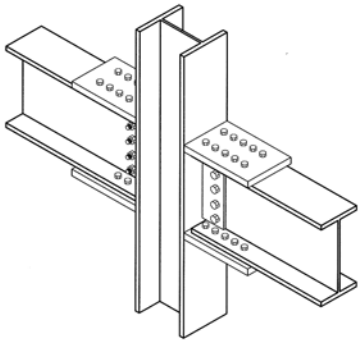

(d) Bolted Flange Plate

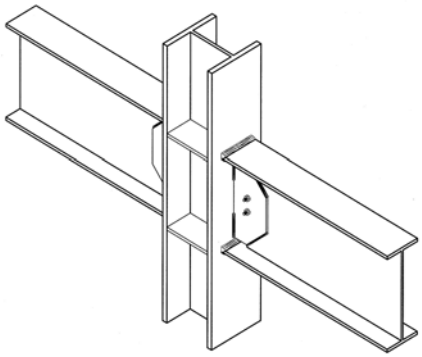

(e) Free Flange

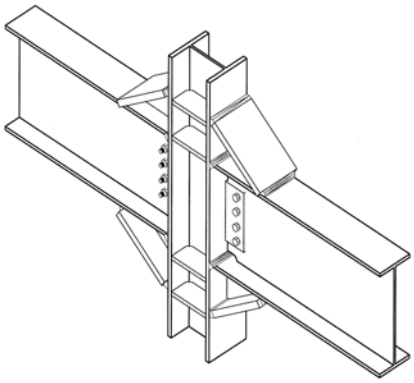

(f) Top and Bottom Haunch

Figure B-11 Fully Restrained Connections (from GSA 2003), cont'd

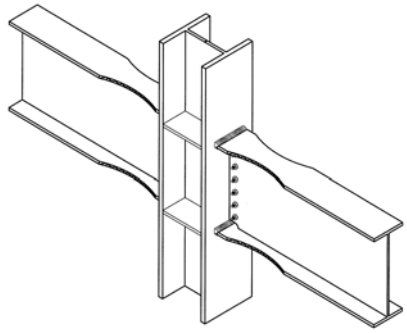

(g) Reduced Beam Section

Figure B-12 Partially Restrained Connections (from GSA 2003)

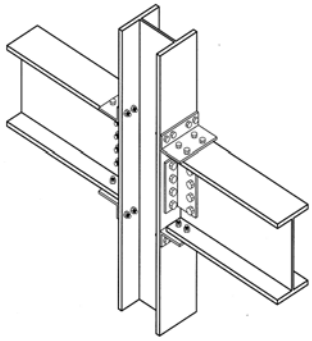

(a) Bolted or Riveted Angle

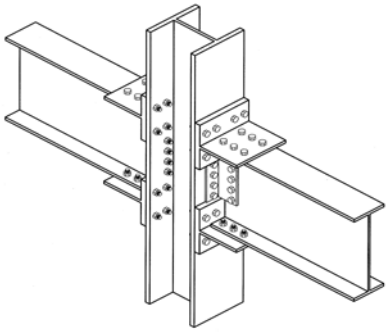

(b) Double Split Tee

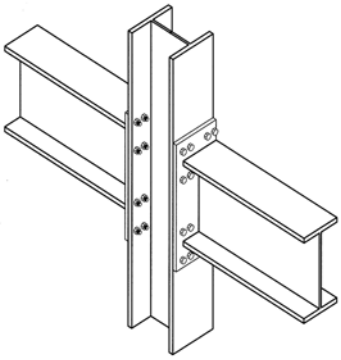

c) End Plate (Unstiffened)

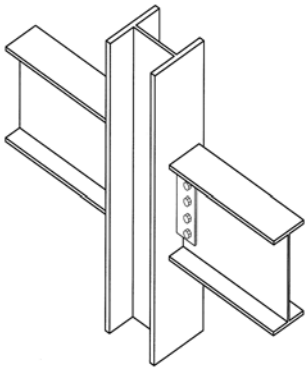

(d) Typical Shear Connection (without slab)

Figure B-13 Weak Axis Connections (from GSA 2003)

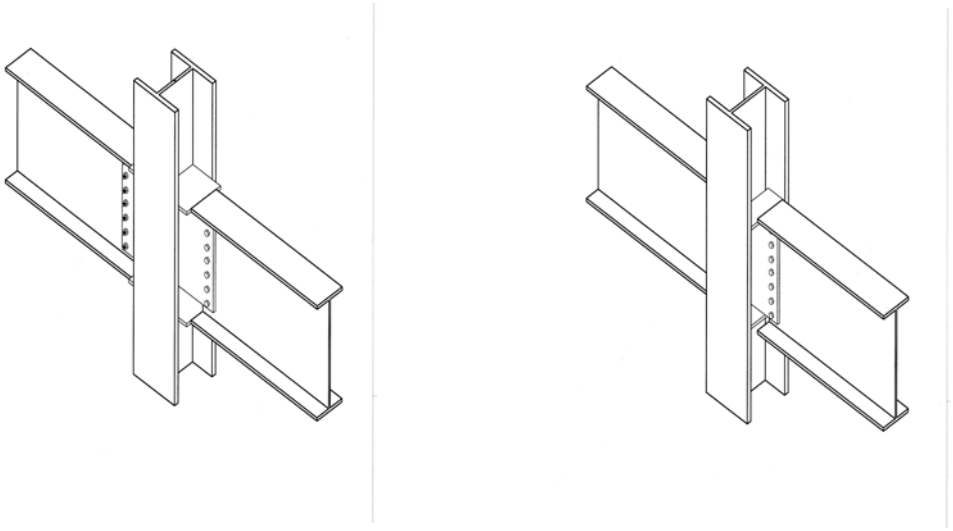

(a) Fully Restrained Connection (b) Typical Shear Only Connection

APPENDIX C

WORKED REINFORCED CONCRETE FRAME EXAMPLE: TIE FORCE AND NONLINEAR ALTERNATE PATH ANALYSIS

C-1 INTRODUCTION.

A typical reinforced concrete frame commercial building design and analysis example has been prepared to illustrate tie force and alternate path calculations. The structure is assumed to require a Low Level of Protection; hence, horizontal and vertical tie forces are required and the Alternate Path Method is applied to any element that cannot provide the required vertical tie force capacity.

The example has been prepared using tools and techniques commonly applied by structural engineering firms in the US. Computer software that is typical of that used for structural design was employed for preliminary design and for the alternate path analysis. Per the option given in the UFC, static nonlinear analysis was performed using material nonlinearity methods available in these codes. The automated procedure described herein eliminates the step by step hinge placement described in earlier sections of the UFC. In the models developed, nonlinear hinges are placed in all members and at all connections in the model, and only “activate” when capacity values are exceeded in the nonlinear hinge definitions. The goal of the analysis and example illustrated in the paragraphs below was to confirm that flexural members would bridge over failed columns, since loss of an external column or internal column would result in a collapsed area in excess of the maximum areas permitted by the UFC (750-ft^2 and 1500-ft^2, respectively).

C-2 PRELIMINARY DESIGN.

The structure is a five-story reinforced concrete moment frame building. It is four bays by five bays in plan, with a 25 ft. x 25 ft. typical bay. The function of this building is office use only, with occupancy under one hundred people. See Figures C-1 and C-2 for drawings of the building and the orientation of the members.

C-2.1 Scope of Model.

As is often the practice in a structural design office, only the lateral-resisting system was modeled. The gravity beams and flooring were designed but not modeled in the analysis program. These elements are typically not included as a part of the lateral load resisting system. Progressive collapse evaluation through the alternate path method thus considers only the primary lateral load resistance structure only.

C-2.2 Model Assumptions.

1) Members are represented by centerline elements (no end offsets)
2) All connections were assumed to be moment connections

3) Column to foundation connections are considered pinned (no rotation restraint)
4) Each floor was taken as a rigid diaphragm
5) Beams were analyzed and designed as rectangular sections (not T-beams)
6) Material properties: concrete strength (f_c') = 5 ksi, rebar yield strength (f_y) = 60 ksi, modulus of elasticity of concrete (E_c) = 3,605 ksi and modulus of elasticity of rebar (E_s) = 29,000 ksi.

C-2.3 Loading Assumptions.

1) Total Dead Load (D) is equal to DL+SDL+CL (see below).
2) Dead Load (DL) is equal to the self weight of the members. Since the flooring and gravity beams were not modeled, the DL caused by these members was assumed to be 54 psf based on a pan joist framing arrangement with lightweight concrete.
3) Super-imposed Dead Load (SDL) is equal to 35 psf. SDL includes partitions, ceiling weight, and mechanical loads.
4) Cladding Load (CL) is equal to 180 plf and is applied only on perimeter beams. CL is assumed to weight 15 psf with 12 ft. story heights.
5) Live Load (L) is equal to 50 psf. The live loads are reducible.
6) Wind loads were applied as concentrated loads at the centroid of rigid floor diaphragms. Wind Load (W) was determined per IBC 2003 using 80 mph. From 0-15 ft., W = 22.6 psf. From 15-25 ft., W = 25.4 psf. From 25-40 ft., W = 28.0 psf. From 40-60 ft., W = 30.5 psf.
7) Earthquake Load (E) is assumed not to control the design because the building is in a non-seismic region (Zone 0). Therefore, E does not control design.
8) Other Loads: Snow Loads (S), Rain Loads (R), Roof Live Loads (L_r) are all assumed as negligible.

C-2.4 Load Combinations (per IBC 2003, Section 1605).

- Eq1: 1.4*(DL+SDL+CL)
- Eq2: 1.2*(DL+SDL+CL) + 1.6*(L)
- *Eq3: 1.2*(DL+SDL+CL) + 0.8*(W)
- *Eq4: 1.2*(DL+SDL+CL) + 1.6*(W) + 0.5*(L)
- *Eq5: 0.9*(DL+SDL+CL) + 1.6*(W)

*Eight wind directions were used in Eq3-Eq5 load combinations. For diagonal wind directions, 75% of the wind in each direction was used.

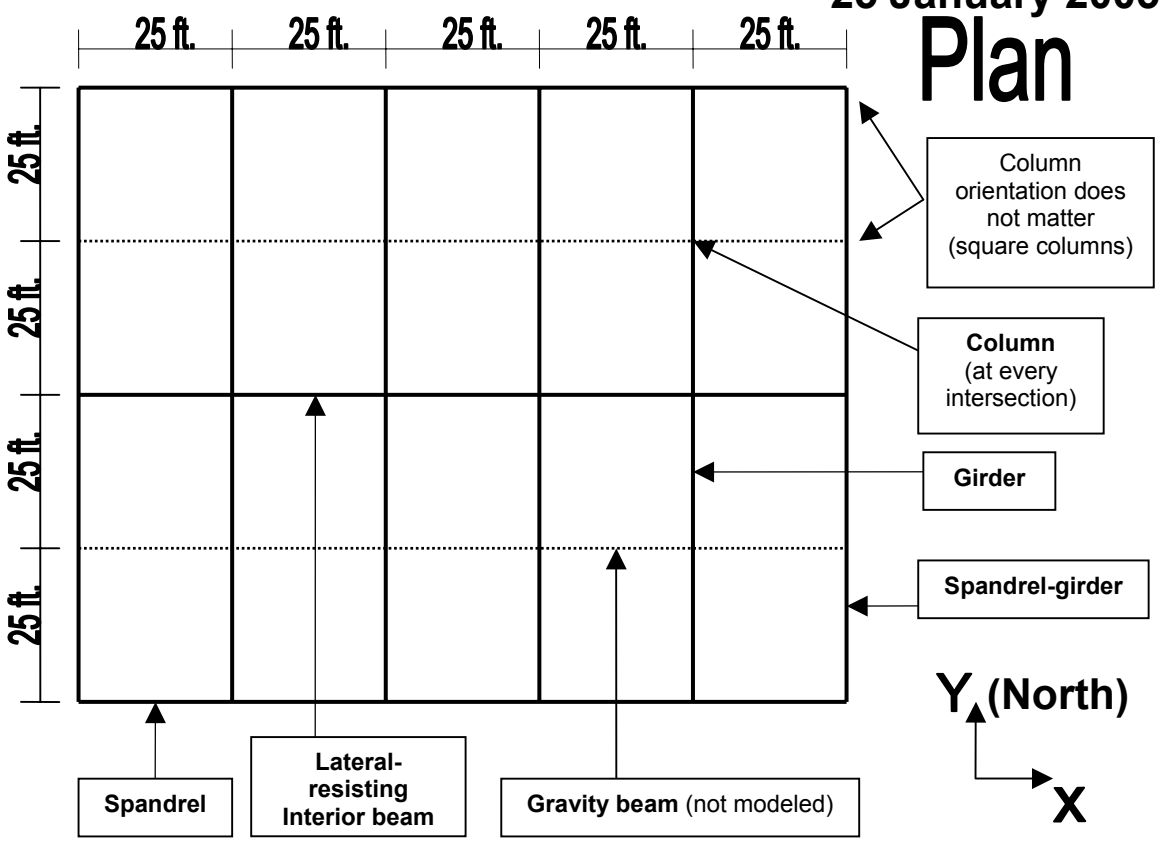

Figure C-1 Reinforced Concrete Building Plan

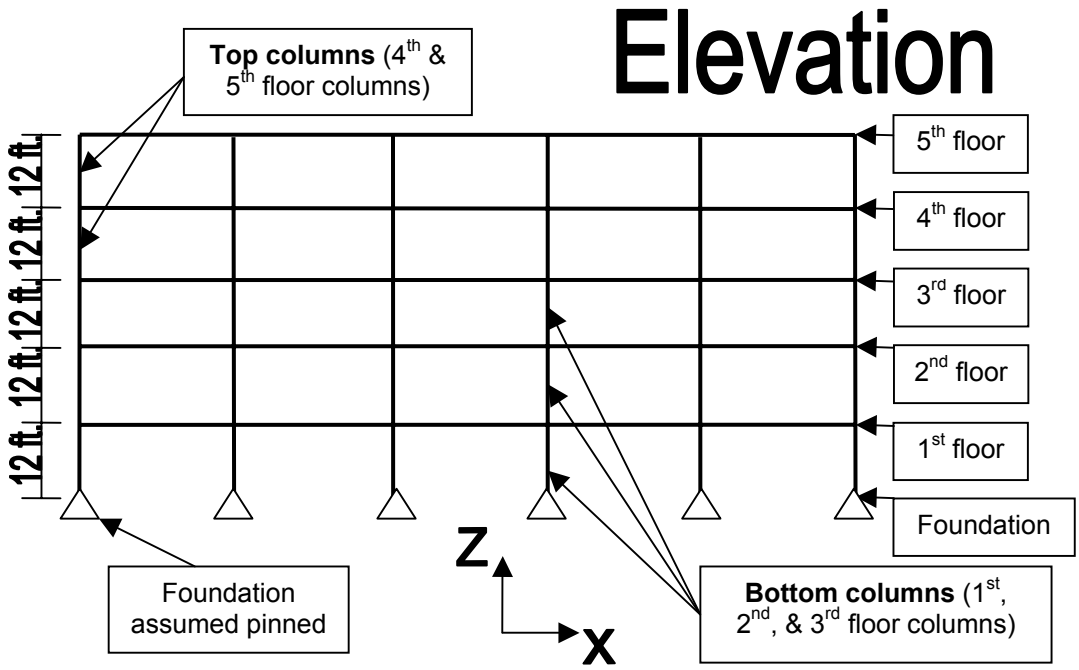

Figure C-2 Reinforced Concrete Building Elevation

C-2.5 Member Sizes.

Members were designed using the most severe design requirements for any member in a group. For example, 1st floor spandrels and 5th floor spandrels are both 20 in x 24 in concrete members. See Table C-1 for preliminary design member sizes and reinforcement of the lateral-resisting system.

Table C-1 Reinforced Concrete Member Sizes and Reinforcement

Member Group	Dimensions	Bottom Reinf.	Top Reinf.
Spandrels	B = 24 in D = 20 in	1.76 in^2	2.4 in^2
Interior Beams	B = 24 in D = 20 in	1.76 in^2	2.4 in^2
Girders	B = 30 in D = 20 in	2.42 in^2	4.48 in^2
Spandrel-Girders	B = 30 in D = 20 in	2.2 in^2	3.25 in^2
Bottom Columns	20 in x 20 in	8 in^2	
Top Columns	20 in x 20 in	6.32 in^2	

*In SAP, reinforcement used for design can be defined in the section properties under the reinforcement overrides for ductile beams.

C-3 TIE FORCE CHECK.

After designing the reinforced concrete moment frame building, tie forces are calculated to ensure progressive collapse requirements are met. The concrete structure designed in step 1 easily meets tie force requirements (See Table C-2 for tie forces and member comparisons).

For the example structure:

F_t = lesser of $(4.5+0.9n_o)$ or 13.5 kips; if $n_o = 5$, $F_t = 9$ kips
l_r = 25 ft
l_s = 12 ft
s = 25 ft (internal ties on column lines)
D = SW + SDL; SW = 54 psf, SDL = 35 psf
D = 89 psf
L = 50 psf
A_{trib} = 625 sf

Table C-2 Required Tie Forces

Tie type	Required Tie Force (kips)	Required Steel Area* (in^2)	Available Steel Area (in^2)	TF > TR_{req}
Peripheral ties	1.0 F_t; 9 kips	0.16 in^2	2.4 in^2 spandrel top 2.2 in^2 spandrel girder top	Yes
Internal ties	Greater of: $\frac{(D+L)}{156.6}\frac{l_r}{16.4}\frac{1.0}{3.3}F_t$ Or $\frac{1.0F_t}{3.3}$ 3.69 kips/ft	0.07 in^2/ft; 1.64 in^2 at column lines	2.4 in^2 internal beam top 4.5 in^2 girder top	Yes
Horizontal ties to columns	greater of: $0.03A_{trib}(4)(D + L)$ or lesser of $2.0F_t$ or $(l_s/8.2)F_t$ 13.2 kips	0.23 in^2	2.4 in^2 spandrel top 2.2 in^2 spandrel girder top 2.4 in^2 internal beam top 4.5 in^2 girder top	Yes
Vertical ties in columns	A_{trib}(D+L)+girder tributary load 99.6 kips	1.77 in^2	6.32 in^2 top column	Yes

- Φ of 0.75 and Ω factor of 1.25 used for rebar

C-4 ALTERNATE PATH SETUP.

For the purposes of this example, it was assumed that one of the 1st floor columns did not meet vertical tie force requirements. Because vertical tie forces were not met by this interior column, the alternate path method must be used with this column being removed (See Figure C-3 and C-4 for the location of the interior column that must be removed).

Figure C-3 Plan of Removed Column

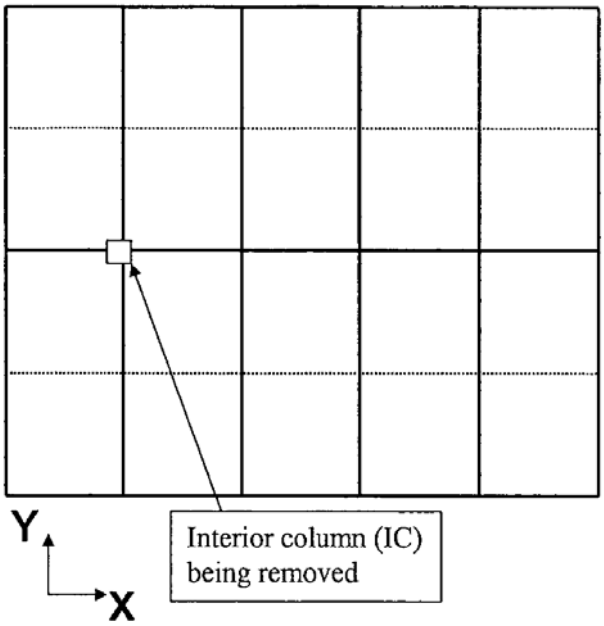

Figure C-4 Elevation of Removed Column

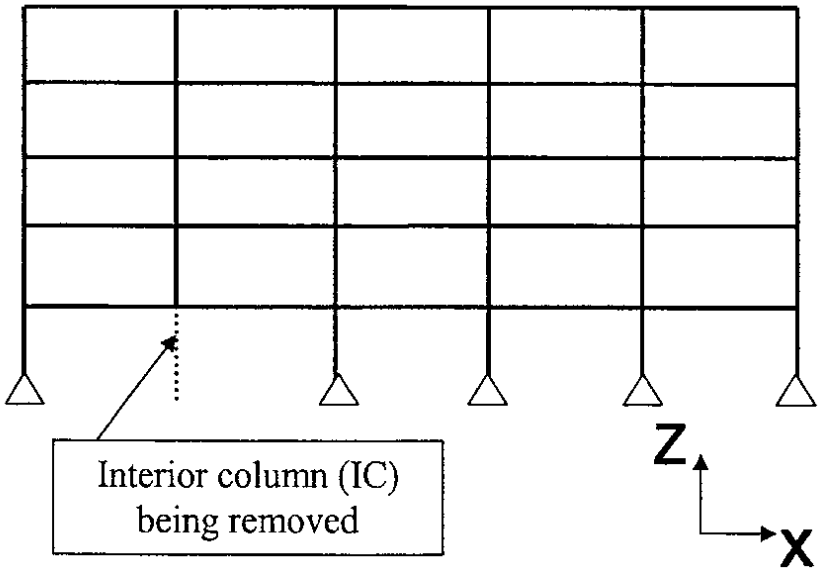

C-4.1 Progressive Collapse Load Combination.

Per the requirements of the UFC, the following load combination is required for alternate path analysis:

$$(1.2D + 0.5*L + 0.2*W) \text{ where } D = DL + SDL + CL$$

This load combination is doubled per the UFC over the bays adjacent to the removed column on all floors for the AP analysis.

C-4.2 Plastic Hinges.

For the nonlinear alternate path method, plastic hinges are allowed to form along the members. These hinges are based on maximum moment values calculated using phi factors and over-strength factors per the UFC. However, only moments can cause a plastic hinge to form in flexural members, and only the axial-moment interaction (PMM) can cause a plastic hinge to form in a column. Any shear or torsion values that would cause a hinge to form would result in an immediate failure.

C-4.2.1 Hinge Locations.

Theoretically hinges can occur anywhere along the beam. However, hinges are allowed to occur at the ends of each member and at the midspan of the flexural members. This simplifies the model by placing hinges in the most probable locations. Structure specific considerations for hinge locations for concentrated loads should be determined.

C-4.2.2 Hinge Properties.

See Figure C-5 and Table C-3 for plastic hinge properties. These properties are adapted from the reinforced concrete member rotation requirements of the UFC. It should be noted that reinforced concrete member allowable nonlinear capacity is based on absolute rotation, independent of member section properties. Nonlinear hinge definition should account for this.

Figure C-5 Nonlinear Hinge Definition

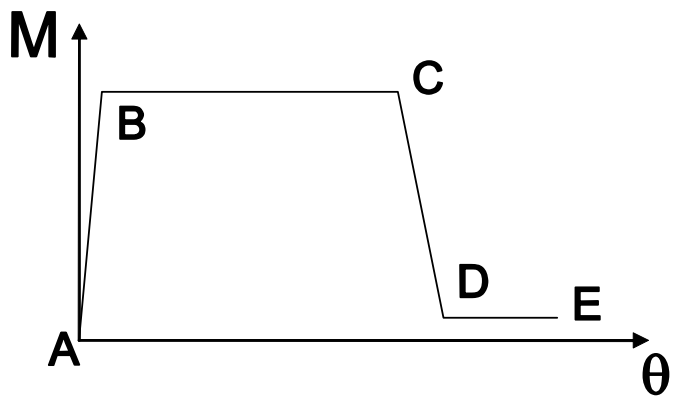

M_{rel} = hinge moment (defined relative to yield moment)
θ = hinge rotation (defined as absolute rotation)

Table C-3 Nonlinear Hinge Properties (absolute rotation in radians)

A		B		C		D		E	
M_{rel}	θ	M_{rel}	θ	M_{rel}	θ	M_{rel}	θ	M_{rel}	θ
1	0	1	0	1	0.0523	0.01	0.0525	0.01	0.055

*If designer is using SAP, moment hinge criteria for concrete columns controlled by flexure should be derived from Table 9-7 of ATC-40; "Seismic Evaluation and Retrofit of Concrete Buildings."

C-5 ALTERNATE PATH ANALYSIS.

The software used and screen shots depicted for this example was SAP 2000NL. The details of this example can be generally applied in any structural software capable of nonlinear static analysis. The "Staged Construction" option in SAP was used to ensure proper redistribution of loads upon member removal. Comparable software should also have the capability of load redistribution, or loads must be redistributed manually prior to analysis.

C-5.1 Develop Preliminary Model.

Build, analyze, and design model as described in part 1 of this example. See Figure C-6 for a concept of how the model should look in SAP.

Figure C-6 Completed Static Nonlinear Model

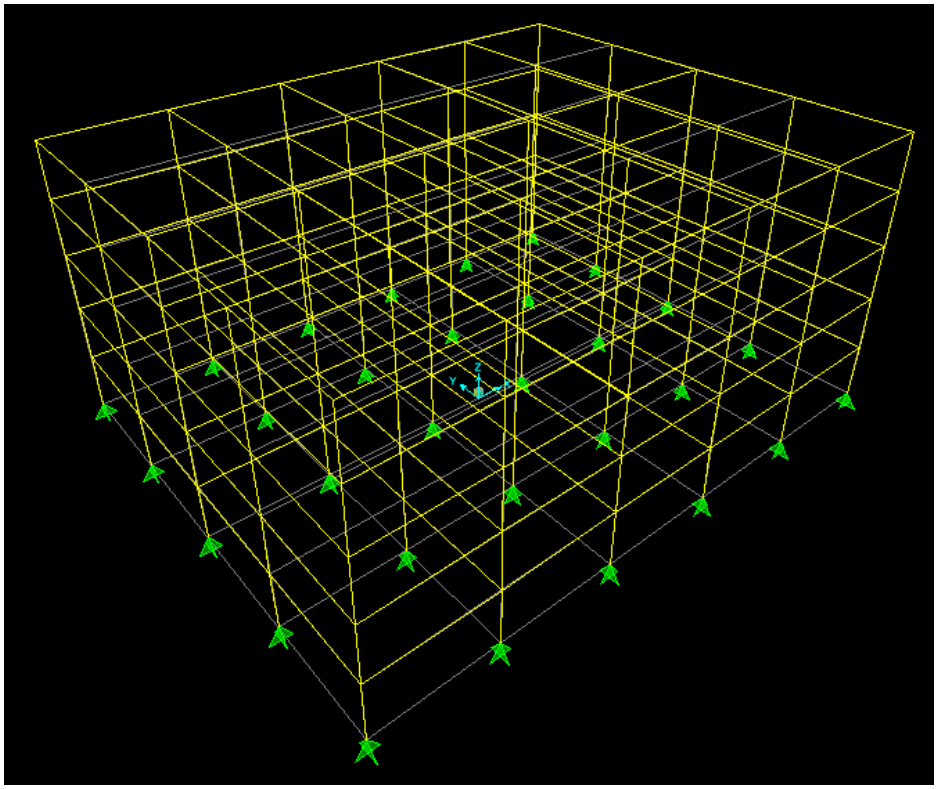

C-5.2 Assign Groups.

1) Assign each column that has to be removed into a separate group. For this example, only one column was removed. It was assigned to group ic.
2) Assign similar members directly connected to the removed column into a separate group. This will allow easy and efficient redesign if needed. For this example, all girders connected to IC were assigned to group ICgird, all interior beams connected to IC were assigned to group ICintbeam.

C-5.3 Define and Assign Hinge Properties.

1) Define new hinge property for each different hinge. For this example, all beams have the same relative hinge properties (moment hinge defined as BeamH) and all the columns have the same relative hinge properties (moment hinge defined as ColumnH).
2) Assign hinges to members. SAP uses relative locations, so all beams will have BeamH hinges at relative locations 0, 0.5, and 1. Columns will have hinges at relative locations 0 and 1.

Figure C-7 Input Screens for Nonlinear Hinge Properties

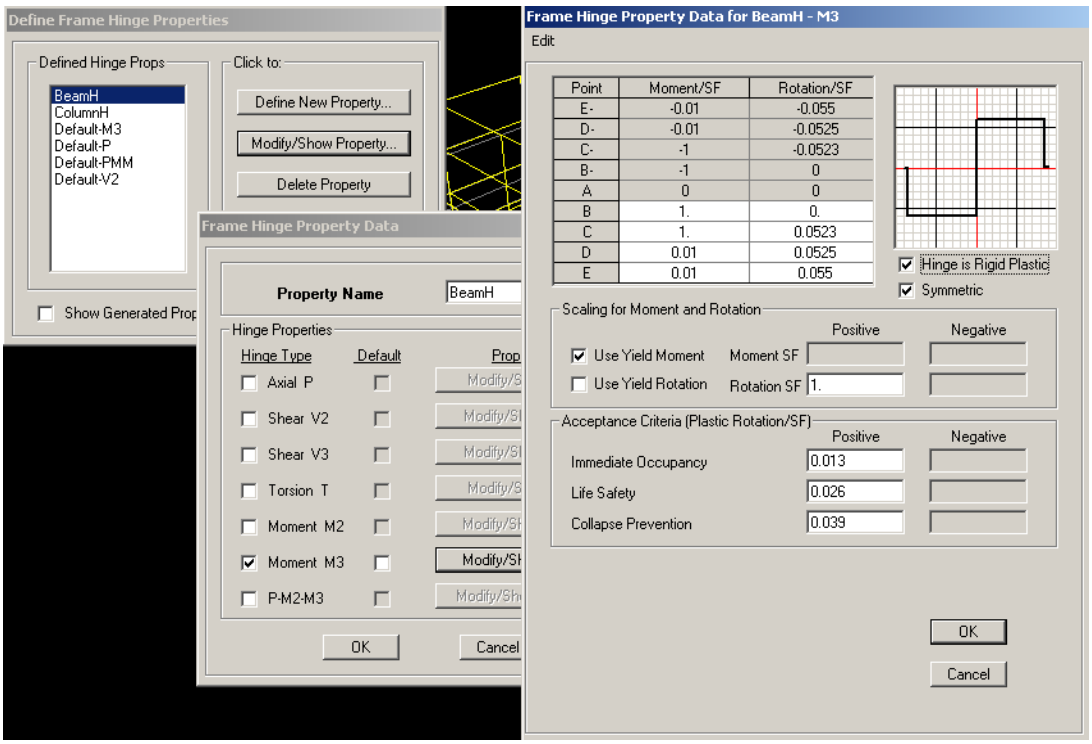

C-5.4 Define Nonlinear Analysis Cases.

1) Add new analysis case for each column being removed and for each wind direction. For this example, eight analysis cases were defined (RICx, RICy, RIC-x, RIC-y, RICxy, RIC-xy, RICx-y, and RIC-x-y). Only one column (IC) was being removed, but there were eight different wind directions to be used in the load combination. For simplicity, only the RICx combination is being shown in the figures.
2) Input loads per the UFC Progressive Collapse Load Combination found in Section C-4.1. See Figure C-8 for an example of inputted values.
3) Click *Results Saved* button and choose *Multiple States*. This option allows the engineer to follow the formation of plastic hinges as incremental load is applied. To better follow the hinge formation progression, it is a good idea to increase the minimum number of saved states to 20.
4) Click *Staged Construction* button. In stage 1 add ALL, and in stage 2 remove the column that did not meet vertical tie force requirements (IC).
5) Click *Nonlinear parameters* button and choose P-delta option. It is possible to use P-delta + large displacements, but it is not necessarily needed for this analysis. If large displacements are used, it is very important that every member that forms a plastic hinge is subdivided into at least 20 smaller members. This is the only way SAP can determine the catenary effects.

Figure C-8 Progressive Collapse Load Combination Input

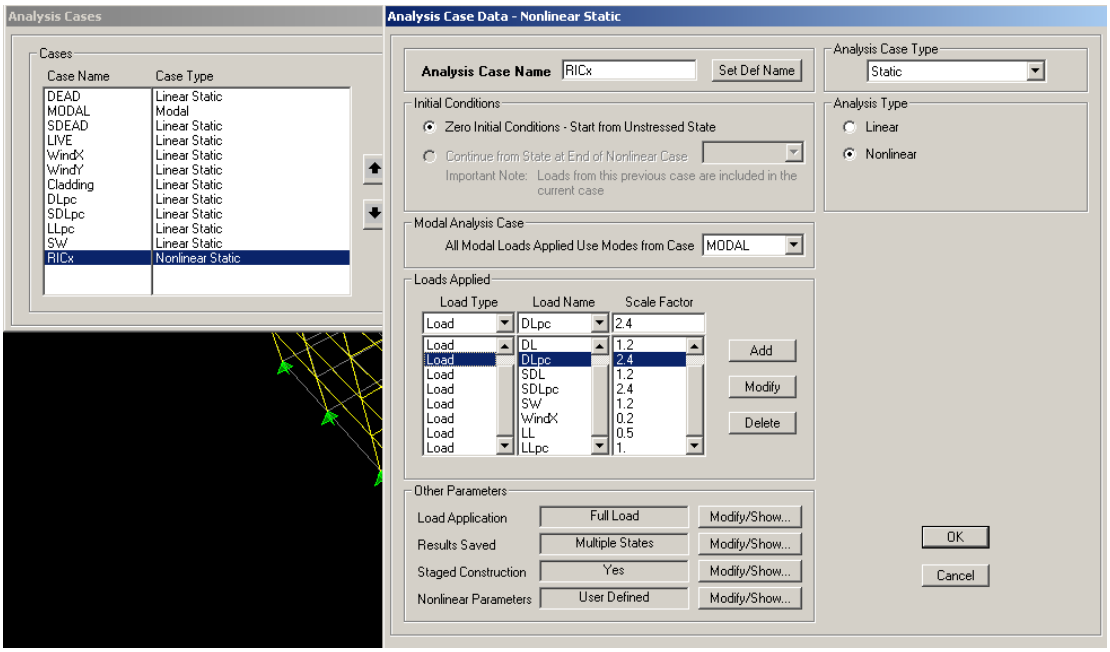

C-5.5 Run Analysis.

It is very important to check that both stages of every analysis case converge! If the analysis does not converge, there is a problem with the model and it must be fixed. The problem could be numerical with assumptions made in SAP, but the most likely reason is that the model has a plastic hinge that failed or a mechanism has formed. At this point, the model cannot support the load. See Section C-5.6 for further discussion of convergence issues.

C-5.6 Progression of Hinge Formations.

1) Since the analysis did not converge, members were redesigned. To determine which members must be redesigned, step through the incomplete progression of plastic hinge formations. The final step saved by SAP will often give the best results on which columns to redesign, but not always. See Figures C-9 through C-11for the final step in the hinge formations of an analysis that did not converge.
2) To view the plastic hinges, click *Display – Deformed Shape*. Choose an analysis case and click to the last step of that case. Any hinge that forms will "light up," and its color denotes the region the hinge has progressed (see Figure C-5). Any hinge that is orange (D) or red (E) has failed.
3) Once members have been selected to be redesigned, rerun the analysis. Repeat this process until the structure converges. The engineer must check each analysis case to make sure that no hinge has failed. Once the analysis converges and no hinges fail, proceed to Section C-5.7 (shear check). See

Table C-4 for final member sizes and Figure C-12 for final deformed shape and hinge formations.

Figure C-9 Hinges and Deformed Shape (isometric view)

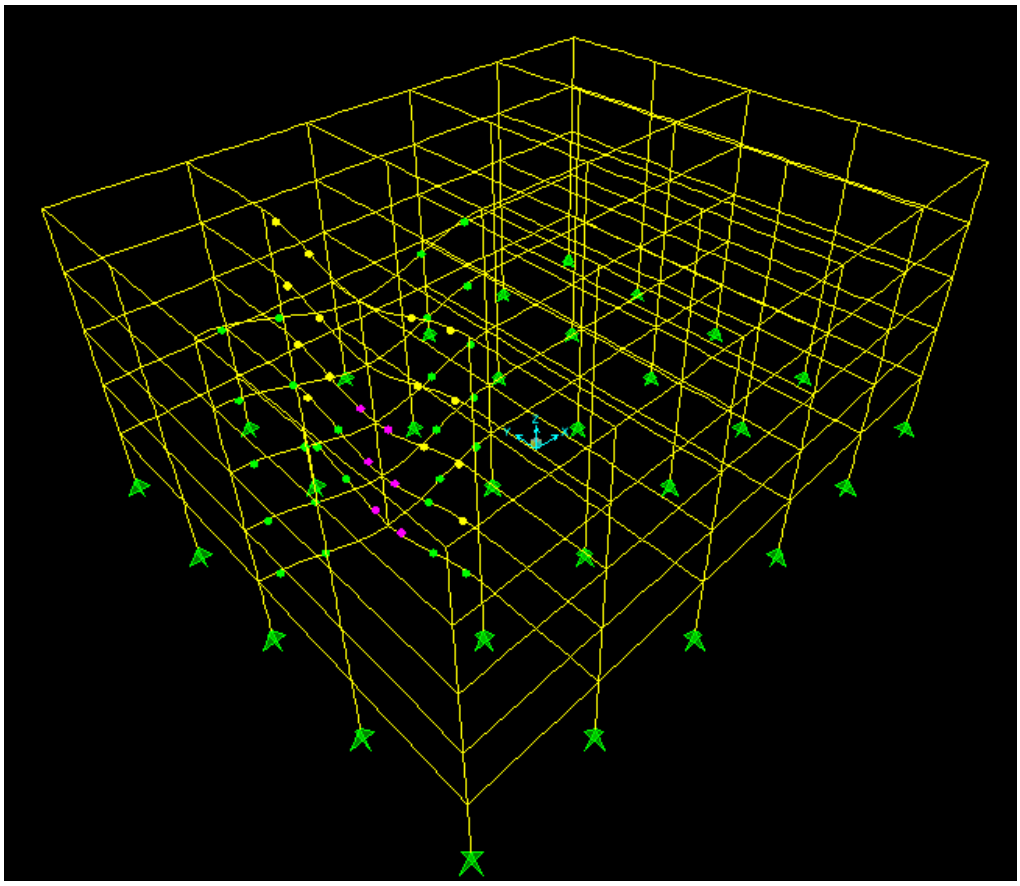

Figure C-10 Hinges and Deformed Shape (x-x single bay)

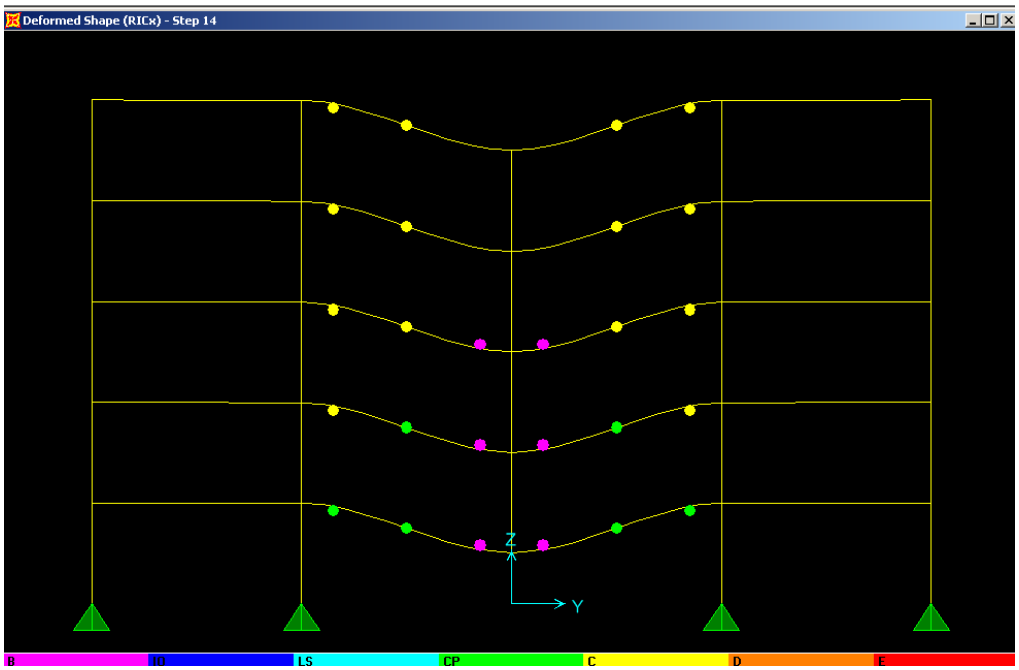

Figure C-11 Hinges and Deformed Shape (y-y single bay)

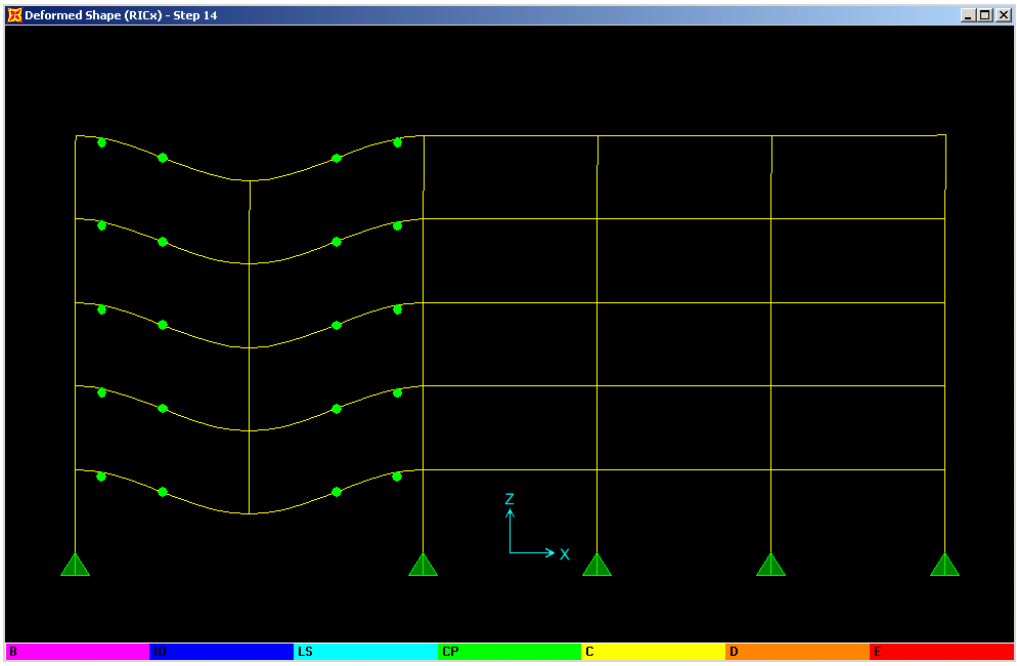

Table C-4 Properties of Redesigned Members

Member Group	Dimensions	Bottom Reinf.	Top Reinf.
Spandrels	B = 24 in D = 20 in	1.76 in^2	2.4 in^2
Interior Beams	B = 24 in D = 20 in	1.76 in^2	2.4 in^2
Girders	B = 30 in D = 20 in	2.42 in^2	4.48 in^2
Spandrel-Girders	B = 30 in D = 20 in	2.2 in^2	3.25 in^2
Bottom Columns	20 in x 20 in	8 in^2	
Top Columns	20 in x 20 in	6.32 in^2	
PC Interior Beams	B = 24 in D = 30 in	4.4 in^2	6.0 in^2
PC Girders	B = 24 in D = 30 in	6.05 in^2	11.2 in^2
PC Columns	30 in x 30 in	12 in^2	

Figure C-12 Hinges and Deformed Shape for Final Design

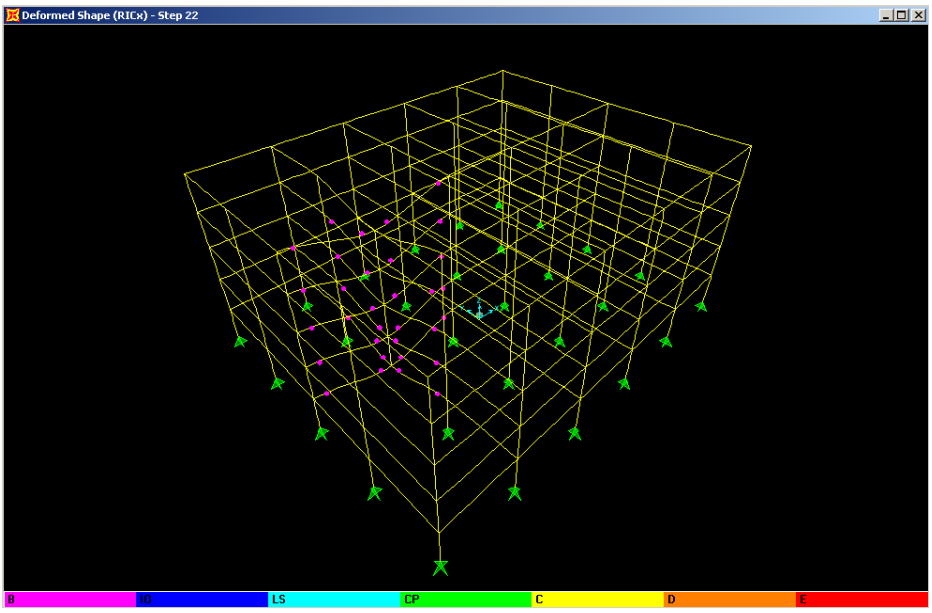

C-5.7 Shear Capacity and Other Capacity Checks.

The initial plastic hinge assumption was that only moment hinges could form in flexural members and axial-moment interactive hinges could form in columns. Furthermore, any shear force that reaches the ultimate shear capacity of a member results in an immediate failure. The final check is to make sure that the factored shear capacities were not exceeded in any member.

C-5.8 Alternate Path Method Complete.

Once the model converges and no plastic hinges fail, the building has satisfied progressive collapse requirements per the UFC.

APPENDIX D

WORKED STRUCTURAL STEEL FRAME EXAMPLE: TIE FORCE AND NONLINEAR ALTERNATE PATH ANALYSIS

D-1 INTRODUCTION.

A typical steel frame commercial building design and analysis example has been prepared to illustrate tie force and alternate path calculations. The structure is assumed to require a Low Level of Protection; hence, horizontal and vertical tie forces are required and the Alternate Path Method is applied to any element that cannot provide the required vertical tie force capacity.

The example was prepared using tools and techniques commonly applied by structural engineering firms in the US. Computer software that is typical of that used for structural design was employed for preliminary design and for the alternate path analysis. Per the option given in the UFC, static nonlinear analysis was performed using material nonlinearity methods available in these codes. Nonlinear hinges are placed in all members and at all connections in the model, and only "activate" when capacity values are exceeded in the nonlinear hinge definitions. The goal of the analysis was to confirm that flexural members would bridge over failed columns, since loss of an external column or internal column would result in a collapsed area in excess of the maximum areas permitted by the UFC (750-ft^2 and 1500-ft^2, respectively).

D-2 PRELIMINARY DESIGN.

The structure considered is a five-story steel moment frame building. It is four bays by five bays in plan, with a 25 ft. x 25 ft. typical bay. The intended function of the building is office use only, with occupancy under one hundred people. See Figures D-1 and D-2 for drawings of the building and the orientation of the members.

D-2.1 Scope of Model.

As is often the practice in a structural design office, only the lateral-resisting system was modeled. The gravity beams and flooring were designed but not modeled in the analysis program. These elements are typically not included as a part of the lateral load resisting system. Progressive collapse evaluation through the alternate path method thus considers only the primary lateral load resistance structure.

D-2.2 Model Assumptions.

1) Members are represented by centerline elements (no end offsets)
2) All connections assumed to be partially restrained (PR) moment connections
3) Column to foundation connections are considered pinned
4) Each floor was taken as a rigid diaphragm
5) Beams were not analyzed or designed as composite sections
6) All steel shapes had a yield strength (f_y) of 50 ksi and an ultimate strength (f_{ult}) of 65 ksi. The modulus of elasticity (E) was 29,000 ksi.

D-2.3 Loading Assumptions.

1) Total Dead Load (D) is equal to DL+SDL+CL (see below).
2) Dead Load (DL) is equal to the self weight of the members. Since the flooring and gravity beams were not modeled, the DL caused by these members was assumed to be 49 psf.
3) Super-imposed Dead Load (SDL) is equal to 35 psf. SDL includes partitions, ceiling weight, and mechanical loads.
4) Cladding Load (CL) is equal to 180 plf and is applied only on perimeter beams. CL is assumed to weight 15 psf with 12 ft. story heights.
5) Live Load (LL) is equal to 50 psf. The live loads are reducible..
6) Wind loads were applied as concentrated loads at the centroid of rigid floor diaphragms. Wind Load (W) was determined per IBC 2003 using 80 mph. From 0-15 ft., W = 22.6 psf. From 15-25 ft., W = 25.4 psf. From 25-40 ft., W = 128.0 psf. From 40-60 ft., W = 30.5 psf.
7) Earthquake Load (E) is assumed not to control the design because the building is in a non-seismic region (Zone 0).
8) Other Loads: Snow Loads (S), Rain Loads (R), Roof Live Loads (L_r) all are assumed that they do not control the design and are negligible.

Figure D-1 Steel Building Plan

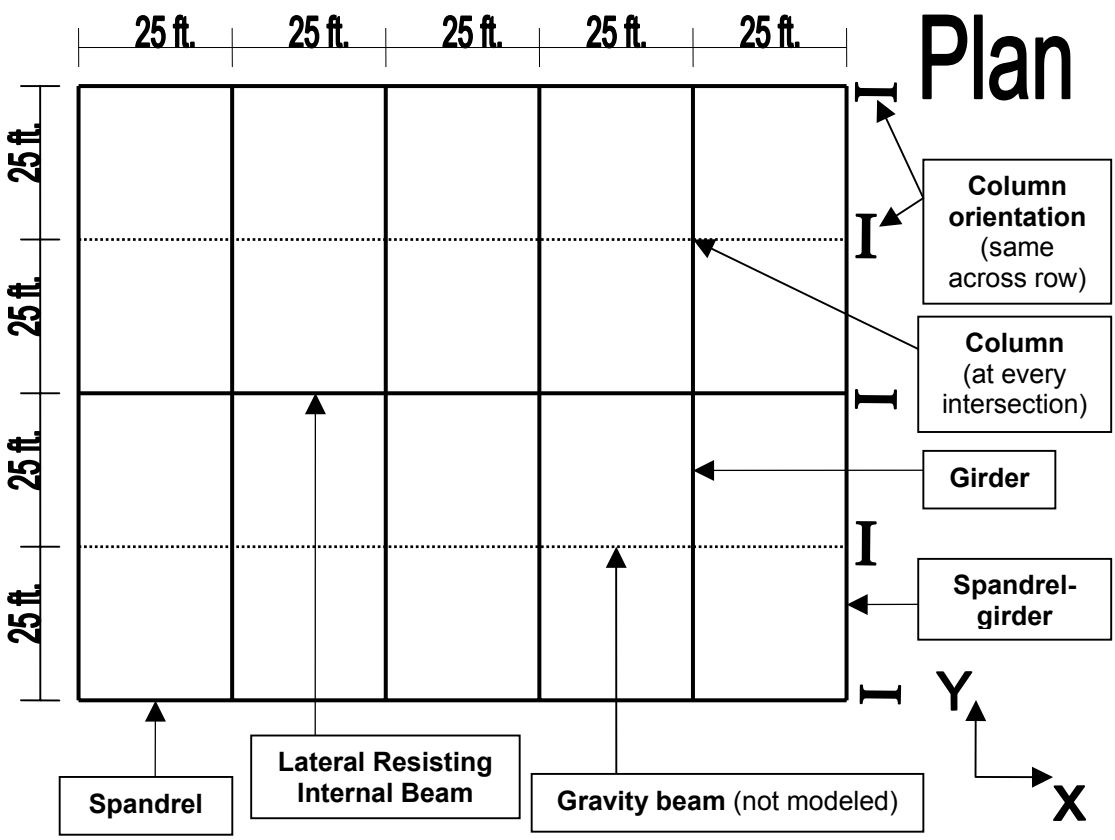

Figure D-2 Steel Building Elevation

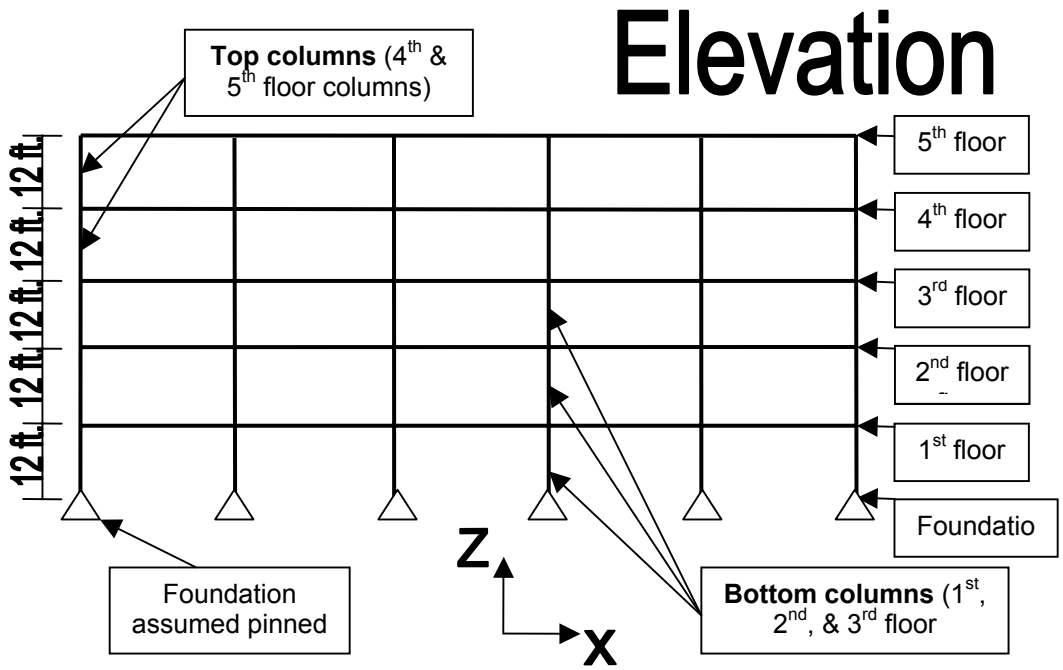

D-2.4 Load Combinations (per IBC 2003).

- Eq1: 1.4*(DL+SDL+CL)
- Eq2: 1.2*(DL+SDL+CL) + 1.6*(LL)
- *Eq3: 1.2*(DL+SDL+CL) + 0.8*(W)
- *Eq4: 1.2*(DL+SDL+CL) + 1.6*(W) + 0.5*(LL)
- *Eq5: 0.9*(DL+CL) + 1.6*(W)

*Eight wind directions were used in Eq3-Eq5 load combinations. For wind in both directions, 75% of the wind in each direction was used.

D-2.5 Member Sizes.

Beam member groups were designed using the maximum moments for all floors. Therefore, beam member groups are identical on all floors (i.e. 1st floor spandrels and 5th floor spandrels are both W18x35). See Table D-1 for preliminary design member sizes of the lateral-resisting system.

Table D-1 Beam and Column Sizes and Groups

Member Group	Frame Section
Spandrels	W18x35
Interior Beams	W18x35
Girders	W18x55
Spandrel-Girders	W18x40
Bottom Columns	W14x145
Top Columns	W14x68

D-3 TIE FORCE CHECK.

After designing the steel moment frame building, tie forces are calculated to ensure progressive collapse requirements are met. Internal tie (ties located at column lines), peripheral tie, edge column tie and vertical tie requirements are calculated. The steel structure designed in step 1 (based on member sizes and moment connections) easily meets tie force requirements (See Table D-2 for tie forces).

For the example structure:

$L = 25$ ft

$s_t = 25$ ft (internal ties on column lines)

$D = 84$ psf

$L = 50$ psf

$A_{trib} = 625$ sf

Table D-2 Required Tie Forces

Tie type	**Required Tie Force** kN (kips)	**Available Member/Detail**	**TF > TR_{req}**
Peripheral ties	$0.25(1.2D+1.6L)s_tL$ But not less than 8.4 kips 28.3 kips	Spandrel and spandrel girder (and connections)	Yes
Internal ties	$0.5(1.2DL+1.6LL)s_tL$ 56.5 kips	Interior beams and girders (and connections)	Yes
Horizontal ties to columns	greater of 0.01(4)(Atrib)(1.2DL+1.6LL) or Internal tie force 56.5 kips	Interior beams, girders, spandrels and spandrel girders (and connections)	Yes
Vertical ties to columns	(Atrib)(1.2DL+1.6LL) 113 kips	Continuous column connections	Yes

As an example for a connection calculation, consider the peripheral column to beam connection illustrated in Figure D-3. This connection has been detailed for the design loads associated with the example building perimeter column to beam loads.

Figure D-3 Steel Beam to Column Connection Typical Tie Force Calculation Example

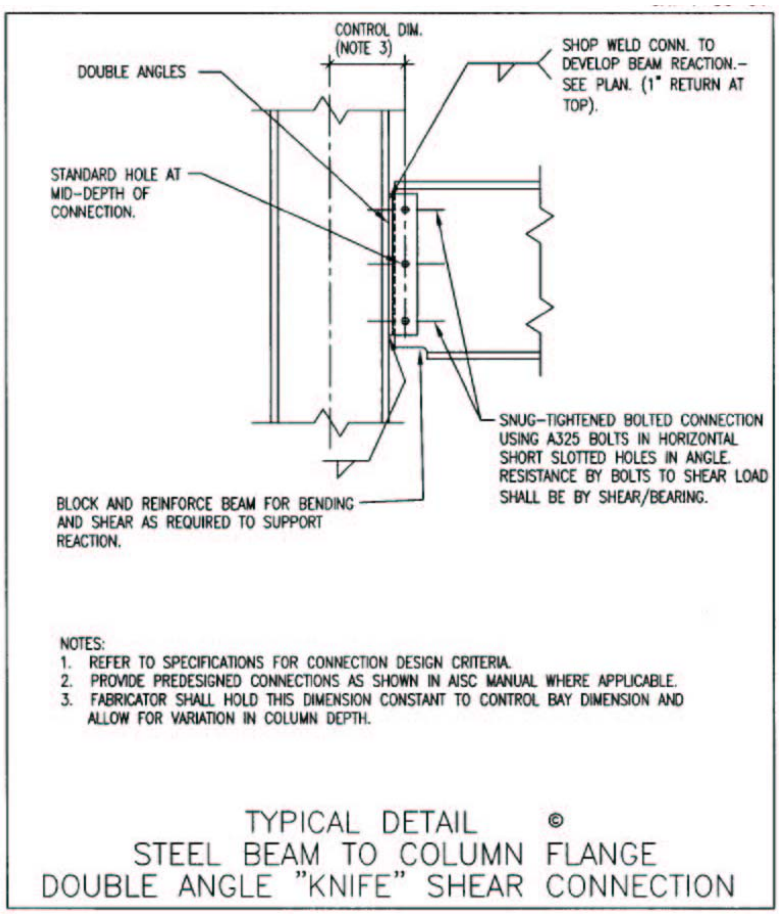

Preliminary connection design details:

W18x55 beam to W14x145 column:
Shear = 60.5 kips
Moment = 261.1 kip-ft
5-3/4in A490 bolts:
78.6 kips>60.5 kips
0.375 in plate:
72.8 kips>60.5 kips
2 fillet welds, 0.313 inx12 in:
100 kips>60.5 kips

Comparison to tie force requirements:*

Available capacity for edge column restraint (A490 bolt shear (SC connection with double shear, threads excluded from shear plane)):
79.5 kips>56.5 kips (required edge column tie force)
(note that prying action on welds might suggest using an all bolted connection

* Steel design Φ's per AISC LRFD 2003

D-4 ALTERNATE LOAD PATH

For the purposes of this example, it has been determined that one of the 1st floor columns did not meet vertical tie force requirements. Because vertical tie forces were not met by this interior column, the alternate load path must be used with this column being removed (See Figures D-4 and Figure D-5 for the location of the interior column that must be removed).

Figure D-4 Plan of Removed Column

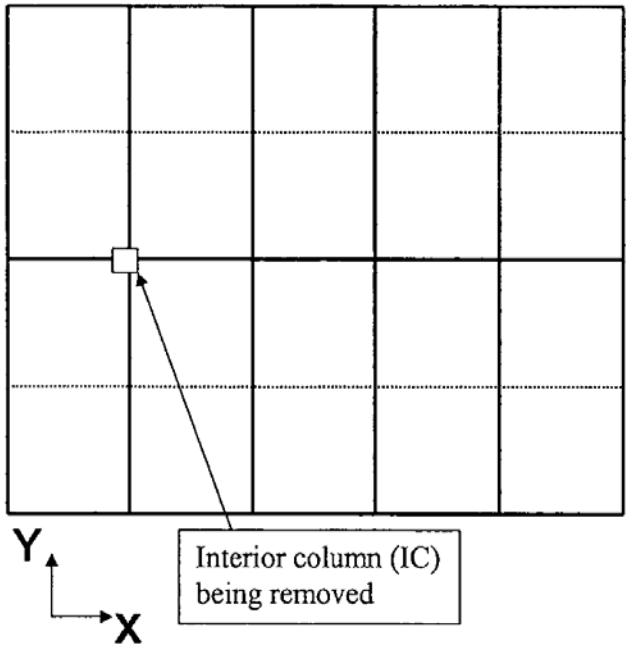

Figure D-5 Elevation of Removed Column

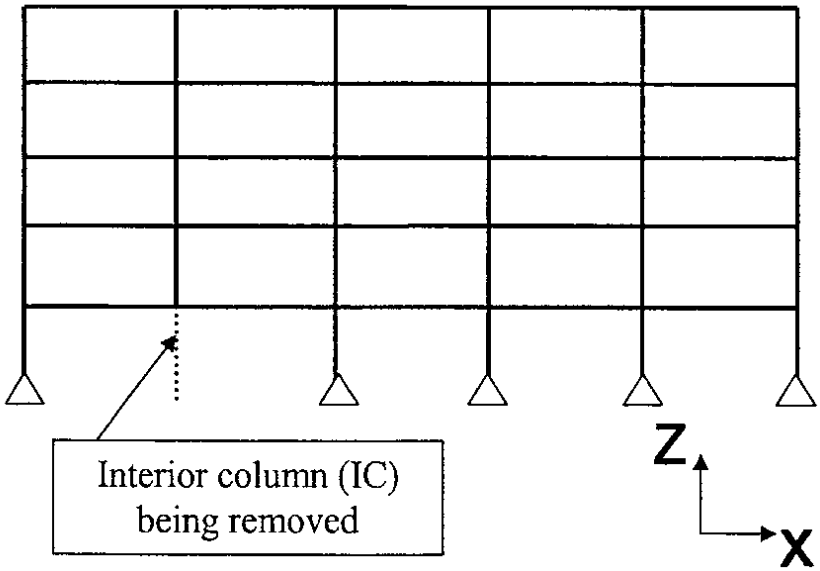

D-4.1 Progressive Collapse Load Combination.

Per the requirements of the UFC, the following load combination is required for alternate path analysis:

(1.2D + 0.5*L + 0.2*W) where D = DL + SDL + CL

This load combination is doubled per the UFC over the bays adjacent to the removed column on all floors for the AP analysis.

D-4.2 Plastic Hinges.

For the nonlinear alternate load path method, plastic hinges are allowed to form along the members. These hinges are based on maximum moment values calculated using phi factors and over-strength factors per the UFC. However, only flexural moments can cause a plastic hinge to form in members, and only the axial-moment interaction (PMM) can cause a plastic hinge to form in a column. Any shear or torsion values that would cause a hinge to form would result in an immediate failure.

D-4.2.1 Hinge Locations.

Theoretically hinges can occur anywhere along the beam. However, hinges are allowed to occur at the ends of each member and at the midspan of the flexural members. This simplifies the model by placing hinges in the most probable locations.

D-4.2.2 Hinge Properties.

See Figure D-6 and Table D-3 for plastic hinge properties. These properties are adapted from the steel member ductility requirements of the UFC.

Figure D-6 Nonlinear Hinge Definition

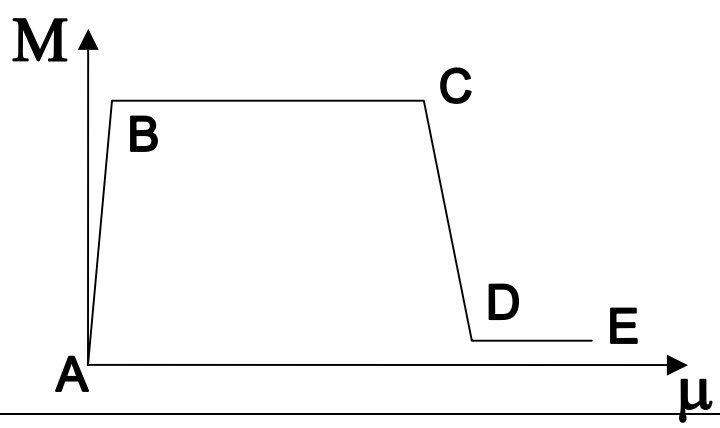

M_{rel} = hinge capacity (defined relative to member's yield moment)
μ = hinge ductility

Table D-3 Nonlinear Hinge Properties (absolute rotation in radians)

Beam Section	A		B		C		D		E	
	M_{rel}	θ	M_{rel}	θ	M_{rel}	θ	M	θ	M	θ
W18x35	1	0	1	0.0106	1	0.0349	0.01	0.035	0.01	0.05
W18x40	1	0	1	0.0104	1	0.0349	0.01	0.035	0.01	0.05
W18x55	1	0	1	0.0103	1	0.0349	0.01	0.035	0.01	0.05

*If designer is using SAP, the moment hinge criteria for columns should be derived from FEMA 356, Table 5-6, where moment-interaction is accounted for through varying deformation allowables based on the ratio of axial load to column axial capacity.

D-5 ALTERNATE LOAD PATH ANALYSIS.

The software used and screen shots depicted for this example was SAP 2000NL. The details of this example can be generally applied in any structural software capable of nonlinear static analysis. The “Staged Construction” option in SAP was used to ensure proper redistribution of loads upon member removal. Comparable software should also have the capability of load redistribution, or loads must be redistributed manually.

D-5.1 Develop Preliminary Model.

Build, analyze, and design model as described in part 2 of this example. See Figure D-7 for a concept of how the model should look in SAP.

Figure D-7 Completed Nonlinear Static Model

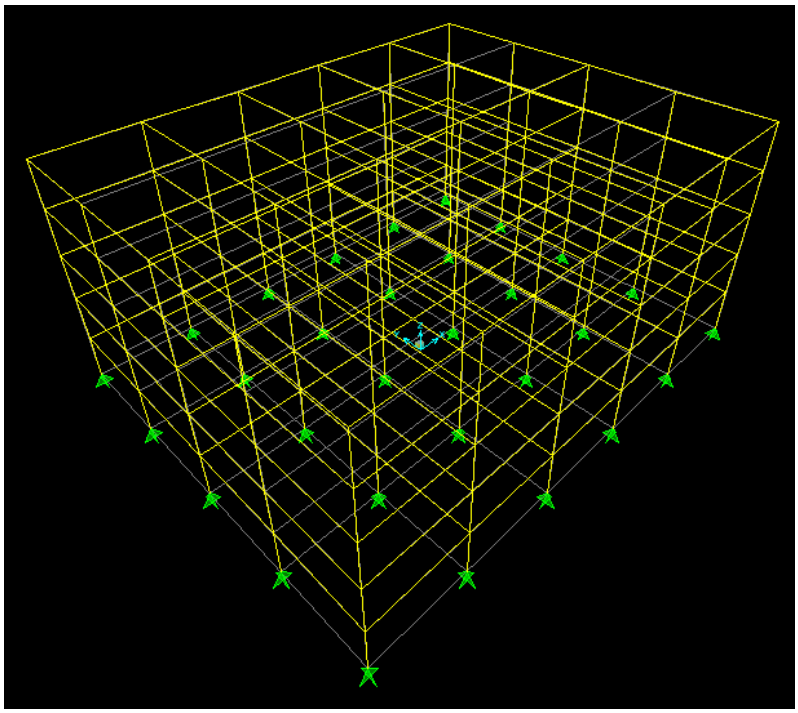

D-5.2 Assign Groups.

1) Assign each column that has to be removed into a separate group. For this example, only one column was removed. It was assigned to group IC.
2) Assign similar members directly connected to the removed column into a separate group. This will allow easy and efficient redesign if needed. For this example, all girders connected to IC were assigned to group ICgird, all interior beams connected to IC were assigned to group ICintbeam.

D-5.3 Define and Assign Hinge Properties.

1) Define new hinge property for each different hinge. Because the beam sections have a different yield rotations, each beam section was defined separately (W18x35H, W18x40H, W18x55H). Columns can be defined in the same way; however, this example used SAP, which currently does not let the user properly define PMM hinges (Axial-moment interaction hinges) manually. Therefore, all column hinges are defined by FEMA 273, equation 5-4 as ColumnH.
2) Modify properties of each hinge to match the hinge properties in Table 4.2.2. All beam sections were in the most compact section group [$(b_f)/(2*t_f) < 52/(F_y)^{1/2}$]. See Figure D-8 for an example of the input screens. All column sections have PMM hinges.
3) Assign hinges to members. SAP uses relative locations, so all beams will have beam hinges at relative locations 0, 0.5, and 1. Columns will have PMM hinges at relative locations 0 and 1.

Figure D-8 Input Screens for Nonlinear Hinge Properties

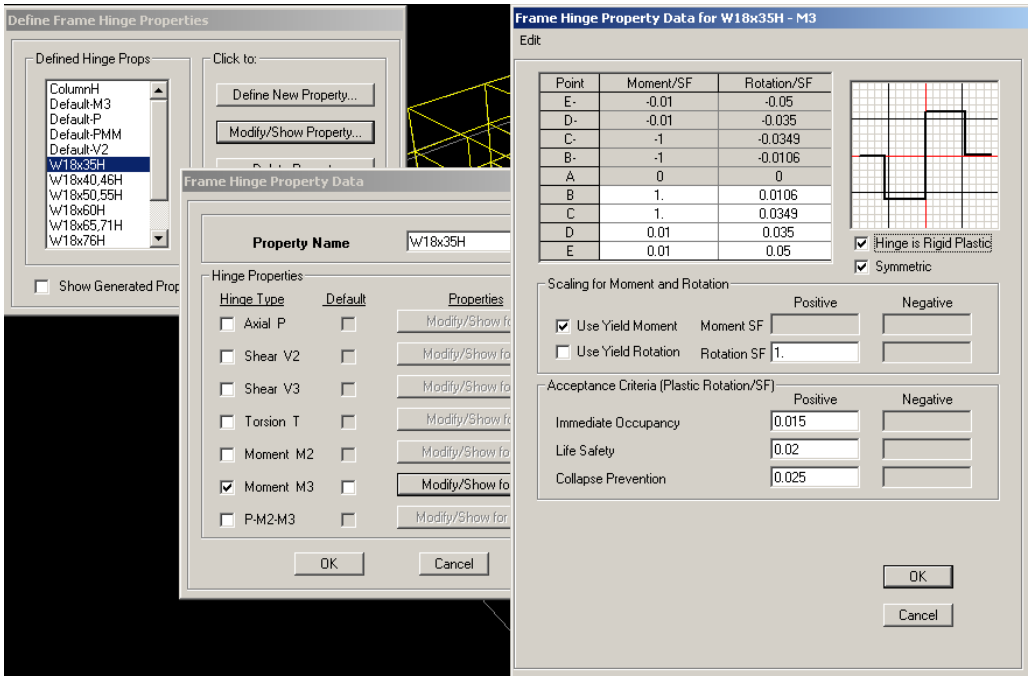

D-5.4 Define Nonlinear Analysis Cases.

1) Add new analysis case for each column being removed and for each wind direction. For this example, eight analysis cases were defined (RICx, RICy, RIC-x, RIC-y, RICxy, RIC-xy, RICx-y, and RIC-x-y). Only one column (IC) was being removed, but there were eight different wind directions to be used in the load combination. For simplicity, this example only shows RICx analysis case in the figures.
2) Input loads per the UFC Progressive Collapse Load Combination found in Section D4-1. See Figure D-9 for an example of input values.
3) Click *Results Saved* button and choose *Multiple States*. This option allows the engineer to follow the formation of plastic hinges as incremental load is applied. To better follow the hinge formation progression, it is a good idea to increase the minimum number of saved states to 20.
4) Click *Staged Construction* button. In stage 1 add ALL, and in stage 2 remove the column that did not meet vertical tie force requirements (IC).
5) Click *Nonlinear parameters* button and choose P-delta option. It is possible to use P-delta + large displacements, but it is not necessarily needed for this analysis. If large displacements are used, it is very important that every member that forms a plastic hinge is subdivided into at least 20 smaller members. This is the only way SAP can determine the catenary effects.

Figure D-9 Progressive Collapse Load Combination Input

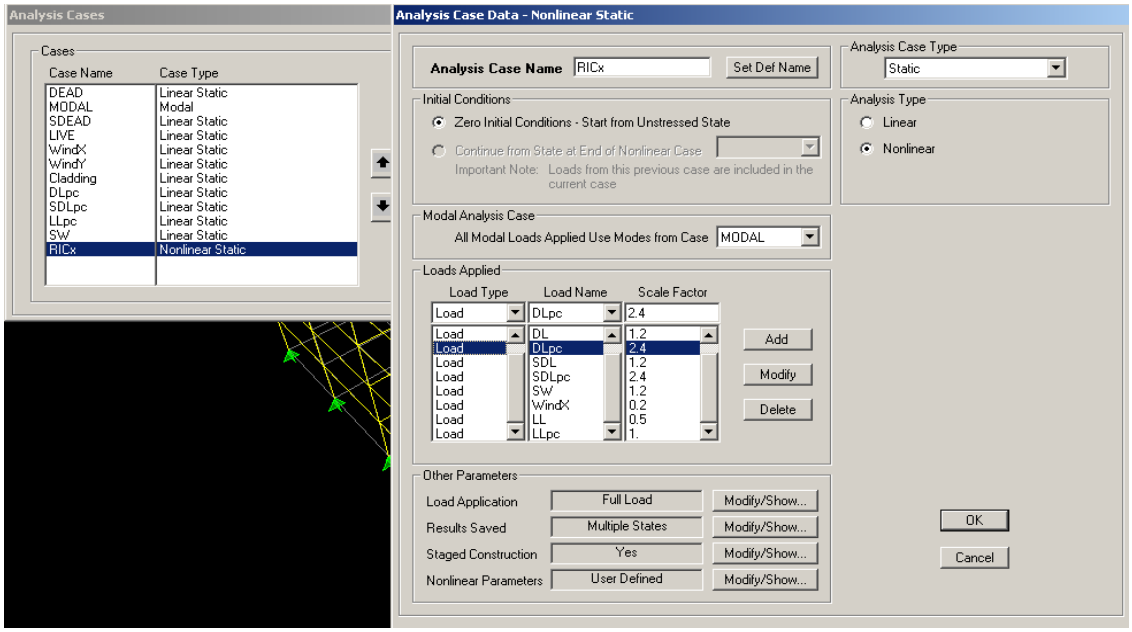

D-5.5 Run Analysis.

It is important to check that both stages of every analysis case converge. If the analysis does not converge, there is a problem with the model and it must be fixed. The problem could be a numerical problem with assumptions made in SAP, but the most likely reason is that the model has a plastic hinge that failed or a mechanism has formed. At this point, the model cannot support the load and causes a progressive collapse. See Section D-6 (redesigning members). If the model converges, proceed to Section D5-6.

D-5.6 Progression of Hinge Formations.

1) Since the analysis did not converge, members were redesigned. To determine which members must be redesigned, step through the incomplete progression of plastic hinge formations. The final step saved by SAP will often give the best results on which columns to redesign, but not always. See Figures D-10 through D-12 for the final step in the hinge formations of an analysis that did not converge.

2) To view the plastic hinges, click *Display – Deformed Shape*. Choose an analysis case and click to the last step of that case. Any hinge that forms will "light up," and its color denotes the region the hinge has progressed (see Figure D-6). Any hinge that is orange (D) or red (E) has failed.

3) Once members have been selected to be redesigned, rerun the analysis. Repeat this process until the structure converges. The engineer must check each analysis case to make sure that no hinge has failed. Once the analysis converges and no hinges fail, proceed to Section 5-7 (shear check). See Table D-4 for final member sizes and Figure D-13 for final deformed shape and hinge formations.

Figure D-10 Hinges and Deformed Shape (isometric view)

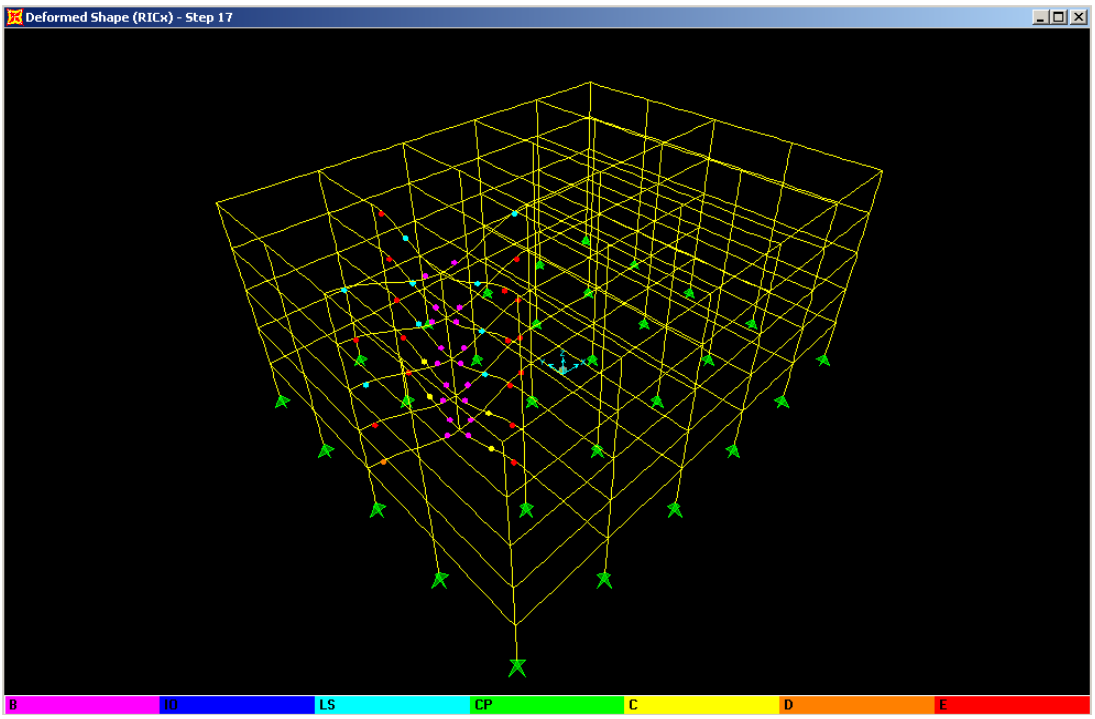

Figure D-11 Hinges and Deformed Shape (x-x single bay)

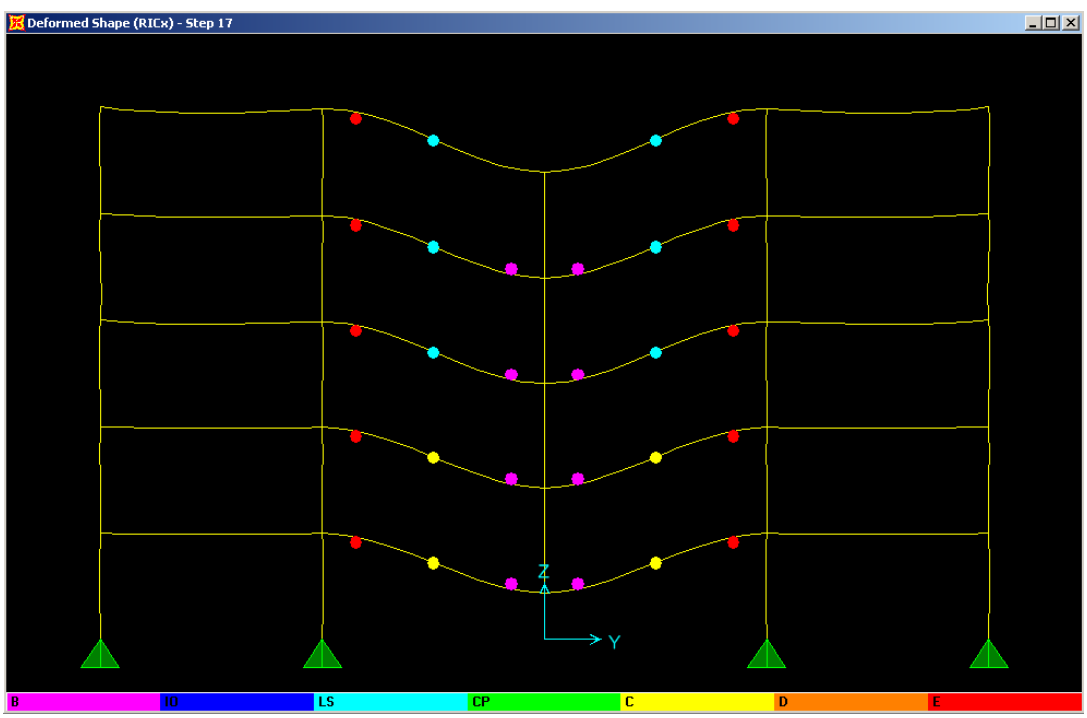

Figure D-12 Hinges and Deformed Shape (y-y single bay)

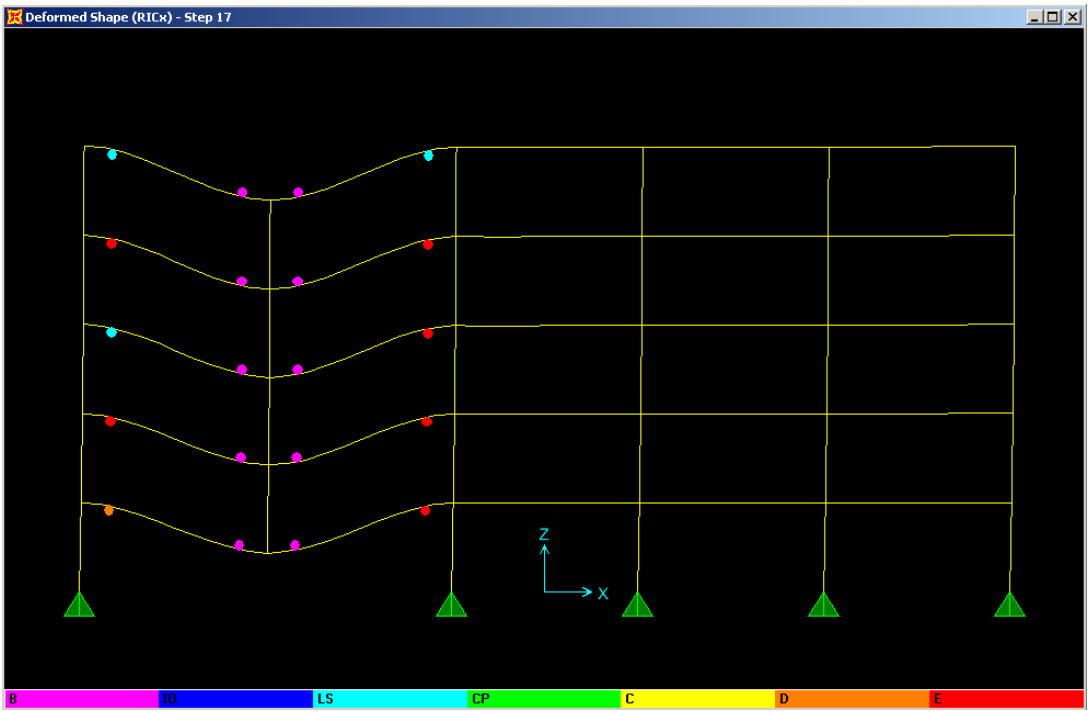

Table D-4 Beam and Column Sections for Final Design

Member Group	Frame Section
Spandrels	W18x35
Interior Beams	W18x35
Girders	W18x55
Spandrel-Girders	W18x40
Bottom Columns	W14x145
Top Columns	W14x68
PC Interior Beams	W18x65
PC Girders	W21x83
PC Top Columns	W14x82

Figure D-13 Hinges and Deformed Shape for Final Design

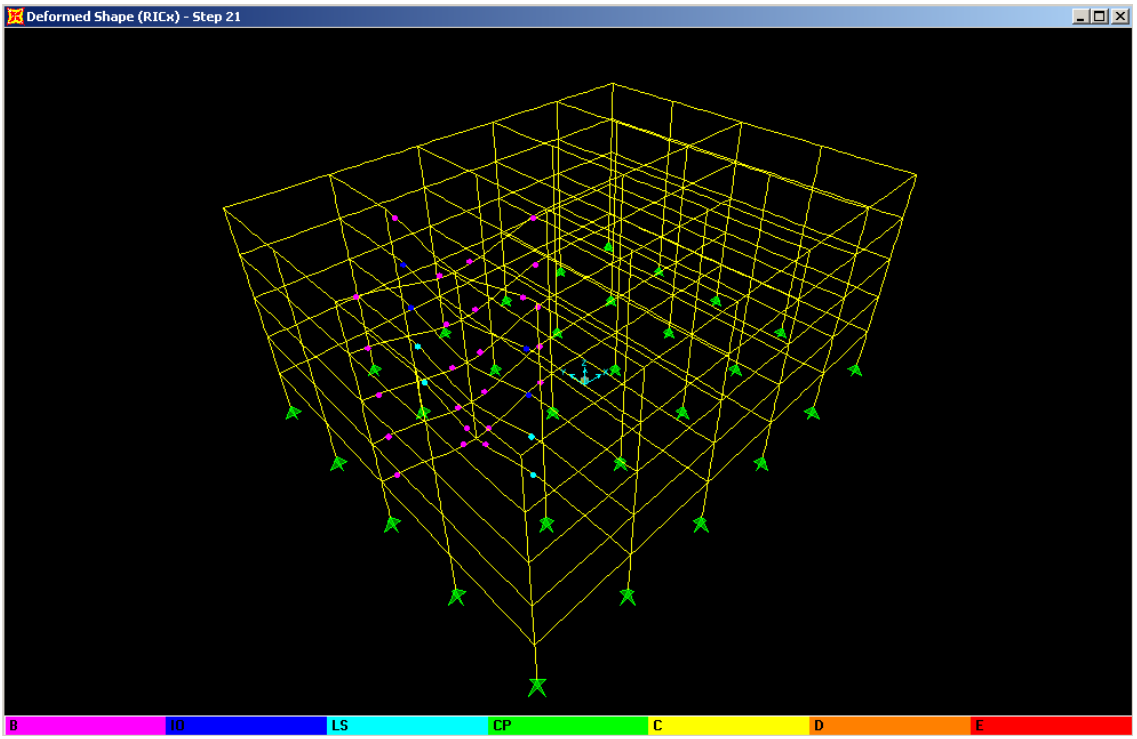

D-5.7 Shear Capacity and Other Capacity Checks.

The initial plastic hinge assumption was that only moment hinges could form in flexural members and axial-moment interactive hinges could form in columns. Furthermore, any shear force that reaches the ultimate shear capacity of a member results in an immediate failure. The final check is to make sure that the shear capacities were not exceeded in any member.

D-5.8 Alternate Path Method Complete.

Once the model converges and no plastic hinges fail, the building has satisfied progressive collapse requirements per the UFC.

APPENDIX E

MASONRY CONNECTIONS FOR PROGRESSIVE COLLAPSE DESIGN

Tie forces in masonry and reinforced masonry construction are generally satisfied through the provision of ductile detailing at connections and joints. Non-ductile materials such as unreinforced masonry must also have adequate continuous reinforcement.

General seismic connection details for brick and concrete masonry construction can be used to develop tie forces. ACI 530-99, “Building Code Requirements for Masonry Structures” and resources such as the Brick Industry Association Technical Note series provide guidance on connection details for structural integrity and redundancy. Like reinforced concrete, tie forces must be developed in brick and concrete masonry through continuous or effectively lapped and embedded reinforcement.

Some typical seismic details are provided on the following pages to illustrate how tie forces can be developed. These modified details are based on those provided in Reinforced Masonry Design by Schneider and Dickey, Prentice Hall, 1980.

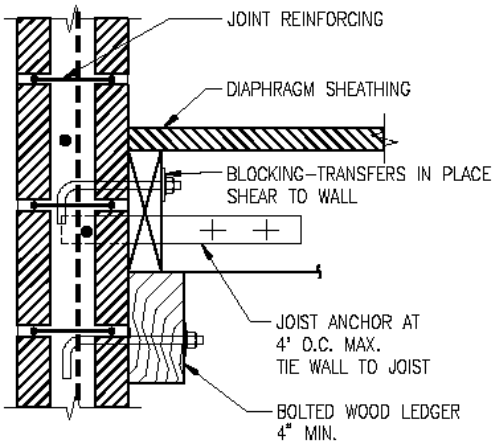

Figure E–1
WOOD LEDGER WOOD JOIST SUPPORTS AT
EXTERIOR BRICK CAVITY WALL

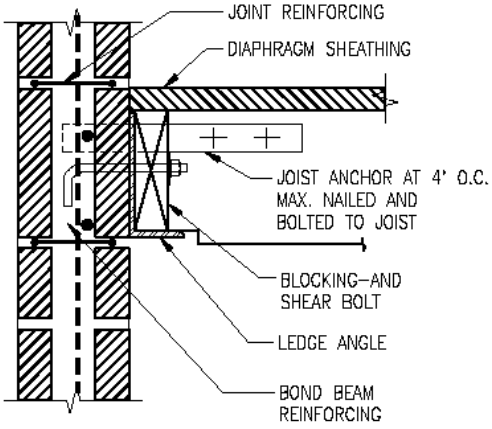

Figure E–2
STEEL LEDGER WOOD JOIST SUPPORT AT
EXTERIOR BRICK CAVITY WALL

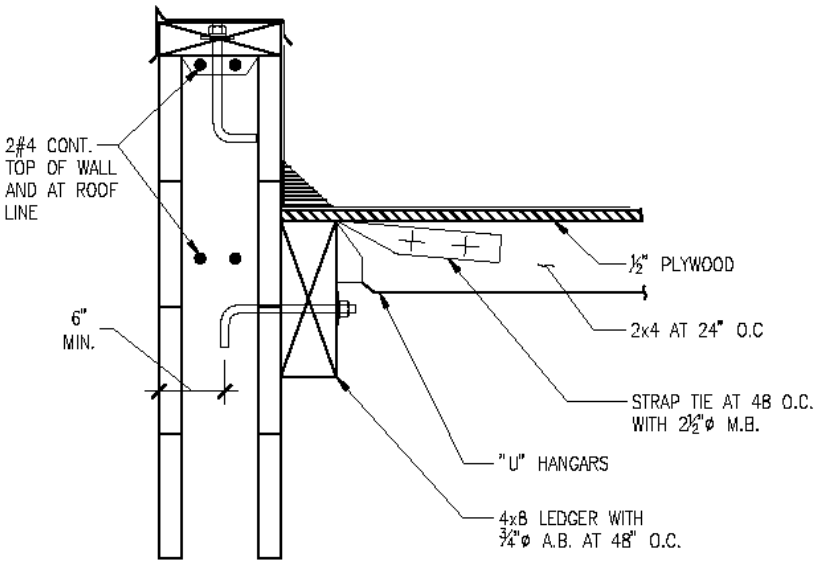

Figure E–3
WOOD RAFTER AT
EXTERIOR BLOCK WALL

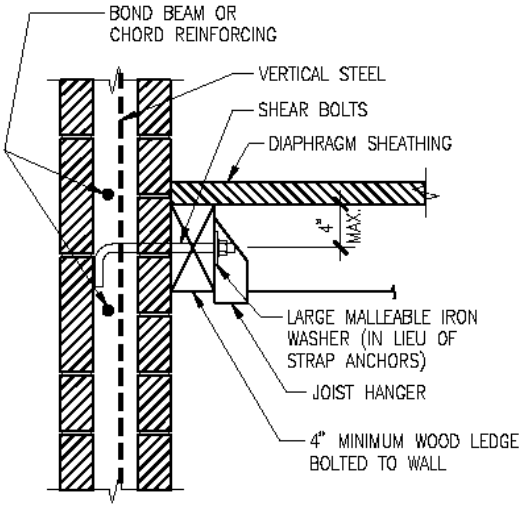

Figure E–4
WOOD JOIST PERPENDICULAR TO BRICK CAVITY WALL
JOIST HANGER SUPPORTS

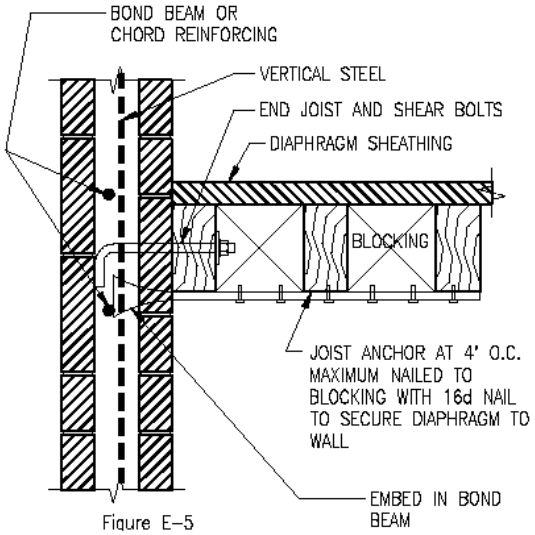

Figure E–5
WOOD JOIST PARALLEL TO BRICK CAVITY WALL
JOIST HANGER SUPPORTS

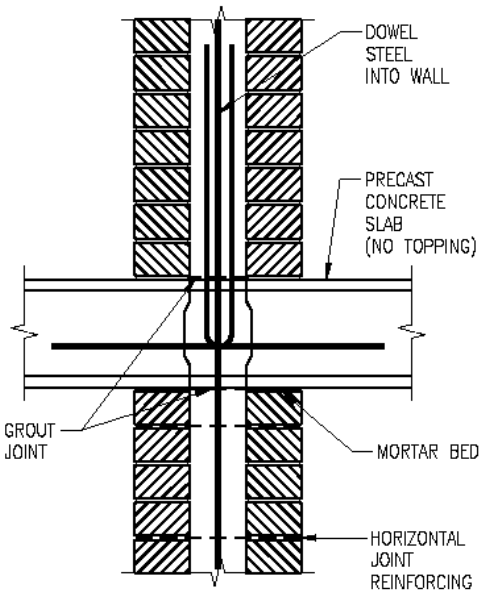

Figure E–6
PRECAST CONCRETE SLAB TROUGH
BRICK CAVITY INTERIOR WALL

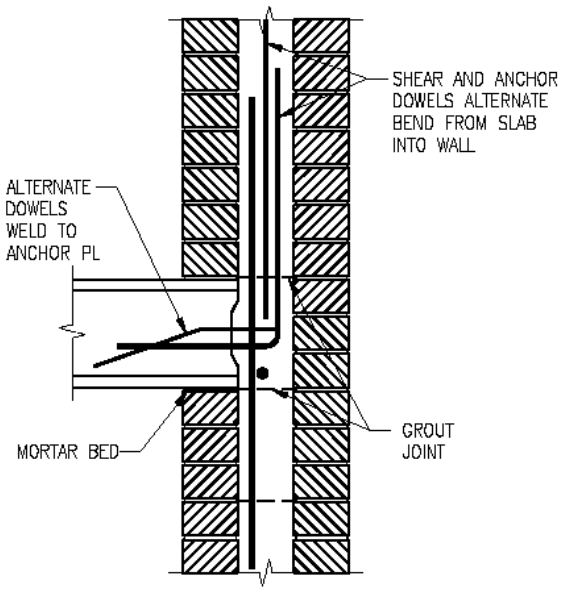

Figure E–7
PRECAST CONCRETE SLAB AT
BRICK CAVITY EXTERIOR WALL

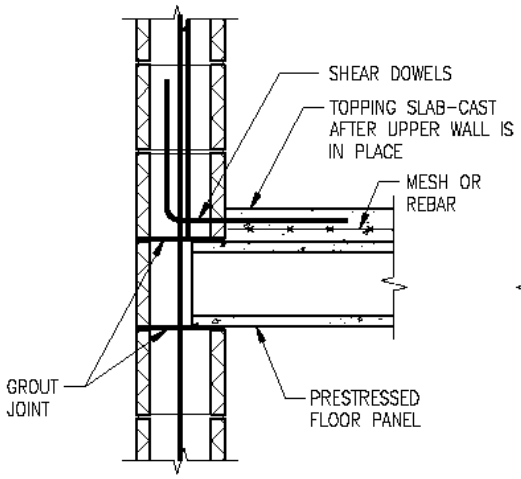

Figure E-8
PRECAST FLOOR PLANKS
AT EXTERIOR BLOCK WALL

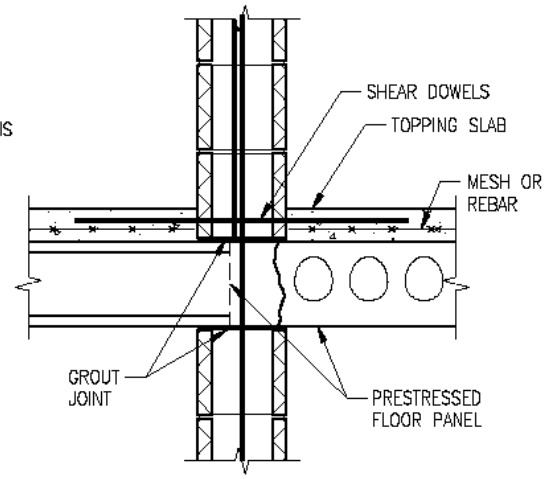

Figure E-9
PRECAST FLOOR PLANKS
THROUGH INTERIOR BLOCK WALL

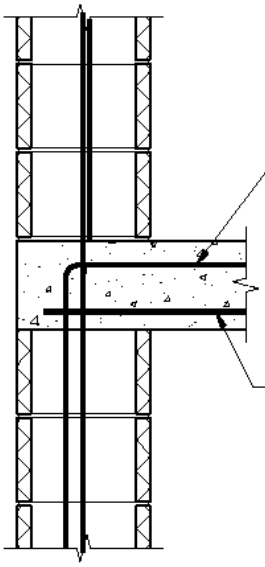

Figure E-10
CAST IN PLACE FLOOR
AT BLOCK EXTERIOR WALL

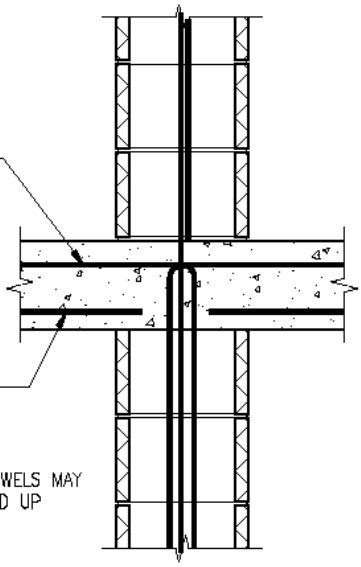

Figure E-11
CAST IN PLACE FLOOR
THROUGH BLOCK INTERIOR WALL

APPENDIX F

GUIDANCE FOR PROGRESSIVE COLLAPSE DESIGN IN WOOD FRAME STRUCTURES

F-1 GENERAL.

Wood frame structures are of interest to DoD designers because of their economy and speed of construction. As presented in Chapter 7, tie force requirements and alternate path analysis techniques are similar to those presented for other construction materials. However, wood frame and "platform" type construction have some significant differences. Wall and floor systems, while designed as load-bearing elements, have significant diaphragm strength. Because of the unique nature of these types of structures, further discussion of design approaches is warranted.

Wood frame construction in CONUS is generally limited to buildings of ten stories or less. These buildings can be wood, composite or masonry sheathed, and can be constructed entirely of a wood frame, floor and wall system, or can be a combination of wood and steel or concrete frame systems.

Two approaches exist for resisting progressive collapse: Tie Forces and Alternate Path.

F-2 TIE FORCES FOR WOOD FRAME CONSTRUCTION.

Internal horizontal ties, external wall ties, peripheral floor ties and vertical ties can be provided in light wood framed construction using a combination of member strength and supplemental mechanical ties. Member strength, mechanical (wood to wood and metal to wood) connection strengths and fastener (nails, staples, screws, lag screws, bolts and pins) strengths can be determined from appropriate design guidance such as the American Forest and Paper Association (AF&PA) "National Design Specification for Wood Construction", NDS-01, 1997 (NDS-01 1997). The supplemental ties can consist of straps, hangers and other manufactured connection products. Adequate tie forces must be developed through a combination of these members and connections. Forces to resist collapse through diaphragm tension and floor plate action may also be present, and are addressed in the next section dealing with the Alternate Path approach.

F-2.1 Example Building.

To illustrate Tie Forces in light wood frame construction, a modern typical wood frame barracks structure is investigated. The exterior appearance of the example structure is shown in Figure F-1. The structure is 154 ft (e-w) by 60 ft (n-s) in plan, has a ground and two upper floors (10 ft floor to floor height) and a wood truss roof system. The exterior load-bearing walls consist of 2x6 southern pine studs on 16 in centers with a single 2x6 floor plate and a double 2x6 top plate. Exterior wall columns consisting of

four 2x6 studs are spaced on 22 ft centers. Interior load-bearing walls in the n-s direction support 8x12 girders running e-w. The exterior wall, the 8x12 girders and the interior corridor walls support the n-s spanning floor system which consists of manufactured I-joists (11.9 in) and 0.75 in plywood spaced at 1 ft centers. Figure F-2 shows a framing diagram for a typical floor.

Figure F-1 Depiction of Barracks Buildings Used in Tie Force Example.

Figure F-2 Framing Plan Schematic for Barracks Building

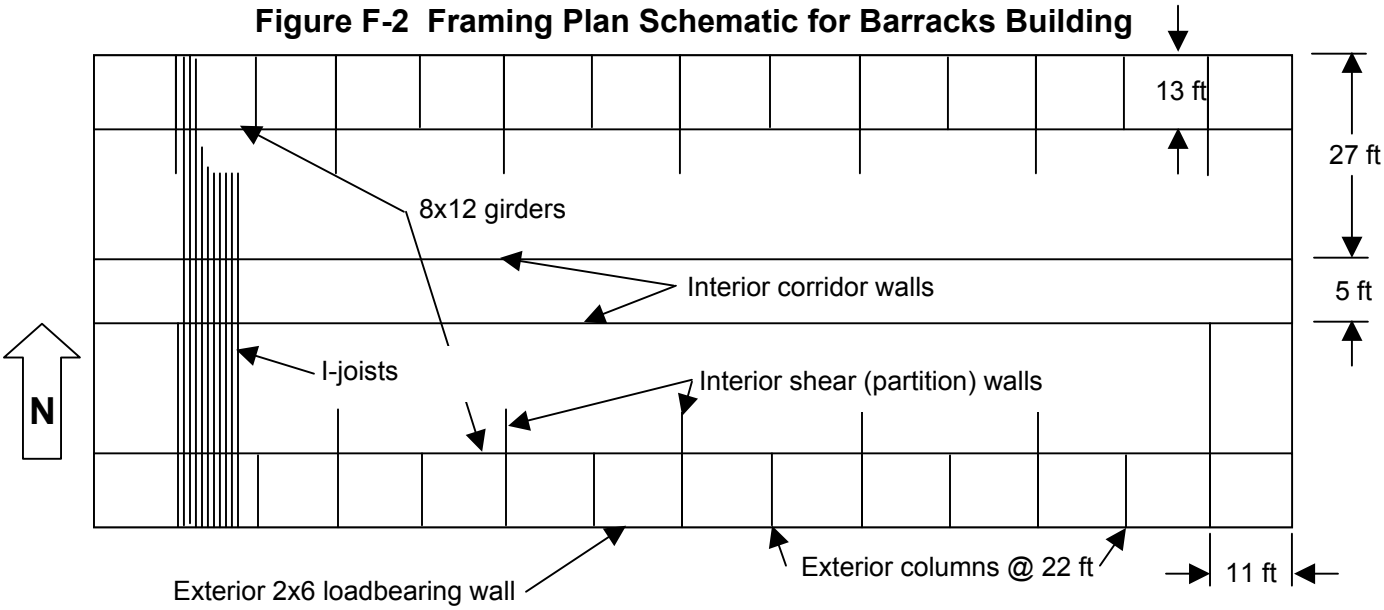

The building incorporates a normal weight brick veneer. Based on the self weight of the described members and specified (averaged) live loads for the design (live loads are not reduced for tie forces), the following loads (unfactored) were defined for tie force development:

D = 23 psf; L = 55 psf

F-2.2 Required Tie Forces.

For the purposes of illustration, these "averaged" loads were used to calculate tie forces, to develop tie schemes, and to generate ties and connections. From Section 7-2, internal horizontal, external wall horizontal, peripheral and vertical tie force capacities were calculated and are presented in Table F-1:

Table F-1 Required Tie Forces for Barracks Building

Tie Force	*Equation*	*Parameters*	*Required Tie Force*
Internal horizontal, TF_i	$\frac{(D+L)}{65}\frac{l_r}{15}\frac{1.0}{3.3}F_t$ F_t = lesser of: $1.63+0.33n_o$ or 4.92 $F_t = 2.63$	$D = 23psf$ $L = 55psf$ $l_r = 14ft$ $n_0 = 3$	$TF_{\text{int } n-s} = 0.89kips/ft$ $TF_{\text{int } e-w} = 0.80kips/ft$
Horizontal to external walls, TF_{ew}	Greater of: The lesser of: $2.0F_t$ or $\frac{l_s}{8.2}F_t$ and 3% of max factored vertical load carried by the wall at the floor level:	$2F_t = 5.26kips$ $l_s = 12 \quad ft$ $\frac{l_s}{8.2}F_t = 3.85kips$ 3% of factored vertical load = 2.5 kips at columns	$TF_{ew} = 1.17kips/ft$ (note: internal ties assumed to function as external wall ties if tied to peripheral tie)
Peripheral, TF_p	F_t		$TF_p = 2.63kips$
Vertical, TF_v	capacity equal to the maximum design ultimate dead and live load received by the wall or column from any one story	(based on max load combination of 1.2D+1.6L)	$TF_v = 1.5kips/ft$

F-2.3 Tie Force Connections.

Tie force "schemes" for each of the required force systems can be postulated and designed or checked as follows:

- Internal horizontal ties—can be distributed at the joists (n-s) with strap ties and distributed in the plywood floor diaphragm (e-w)
- Wall ties—internal ties can function as wall ties if connected to peripheral tie with strap ties
- Peripheral ties—wall headers with strap ties
- Vertical ties—can be distributed in the walls (2x6 studs) with floor tension ties

Calculations and selected connections supporting these schemes are presented in Table F-2. Note that candidate manufactured connections reference the USP catalog. Figures F-3 through F-5 illustrate tie details.

Table F-2 Calculations for Tie Force Wood Member and Connection Design

Tie	*Member allowable*[1]	*Connection allowable*[2]	*Recommended connection*
Internal (n-s)	Every 4th joist used as a tie: *Required tie force = 0.89 kips/ft* *Joist tensile capacity = 5.7 kips* *@ every 4th joist, capacity = 1.43 kips/ft > 0.89 kips*	Joist to joist strap over girder/walls (USP KSTI260 I-joist strap; 12 ga, 60 in long, 60 nails. Also used as wall/horizontal tie, wrapped over 2x6 headers and peripheral tie (verify performance of strap over header with vendor). *Capacity = 3.76 kips > 0.89(4) = 3.56 kips*	*Joist to joist strap over girder/walls (USP KSTI260 I-joist strap; 12 ga, 60 in long, 60 nails. (See Figure F-3)*
Internal (e-w)	Plywood diaphragm used as ties: *Required tie force = 0.80 kips/ft* Check plywood alone in tension: Factored allowable = 960 psi, *8.4 kips/ft >>0.89 kips/ft* If plywood sheets staggered 4 ft, 12d nails @ 1 ft (joist spacing) and @ 6 in along joists, *Capacity = 1.43 kips/ft > 0.89 kips/ft*	Strap to exterior wall at 32 in; 0.80(32)/12 = 2.13 kips USP KSTI236 12 ga, 36 in long strap, 36 10d nails *Capacity = 2.26 kips > 2.13 kips* Also used as wall/horizontal tie, wrapped over 2x6 headers and peripheral tie (verify performance of strap over header with vendor).	*USP KSTI236 12 ga, 36 in long strap, 36 10d nails (See Figure F-3)*

[1] Member allowables include capacity adjustment factors
[2] Connection allowables factored to include rate adjustment. Note that catalog connection allowable value (developed for ASD) are used here. Connector resistance may be converted (significantly increased) by applying the connector resistance adjustment equations provided in Section 3.4 of AF&PA's "LRFD Pre-Engineered Metal Connectors Guideline," a supplement to AWC/AF&PA "LRFD Manual for Engineered Wood Construction," and AF&PA/ASCE 16-95 "Standard for Load Resistance Factor Design (LRFD) for Engineered Wood Construction.

Table F-2 Calculations for Tie Force Wood Member and Connection Design, cont'd

Wall ties			Not required if internal ties connected to peripheral tie
Peripheral	Use external wall header with straps. *Required tie force = 2.63 kips* *2x6 top plate factored capacity = 16 kips >> 2.63 kips*	Strap headers together; Use USP KSTI248 12 ga, 48 in long strap tie w/48 nails, *Capacity = 3.04 kips > 2.63 kips* Strap on member top with 24 bend over at corners (verify performance with vendor)	*Use USP KSTI248 12 ga, 48 in long strap tie w/48 nails (See Figure F-4)*
Vertical	Use floor "holdown" ties spaced every 4th wall stud or at columns, *Required tie force = 1.5 kips/ft; 8.25 kips required every 4th stud* *Single 2x6 stud capacity = 16 kips > 8.25 kips*	Use USP TD15 holdown between floors, 3 ga, 52 in long, 3.5 in wide bracket, double capacity allowed for double shear, Capacity = 4.5(2) = 9 kips > 8.25 kips	*Use USP TD15 holdown between floors,* *3 ga, 52 in long, 3.5 in wide bracket, double capacity allowed for double shear* *(See Figure F-5)*

Figure F-3 Schematic of Internal and Horizontal Ties

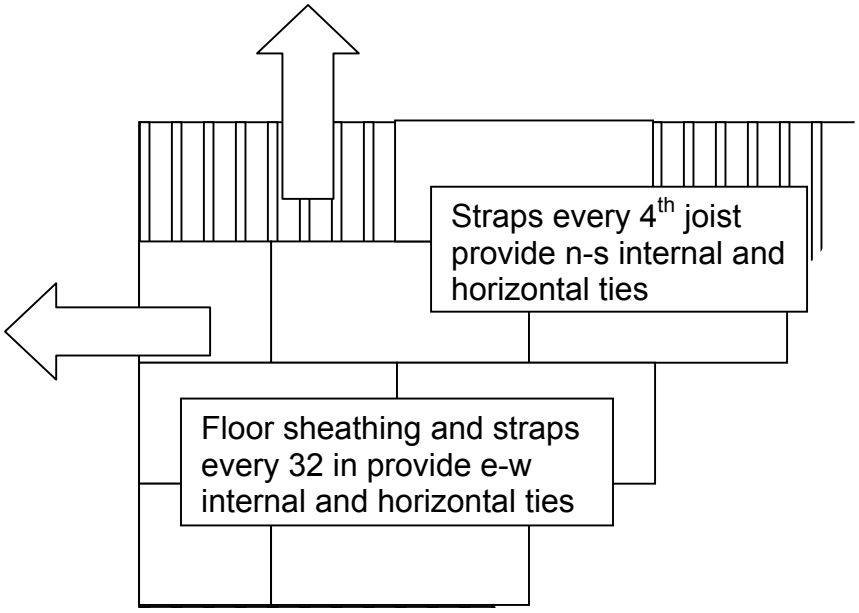

Figure F-4 Schematic of Peripheral and Horizontal Ties; N-S Detail

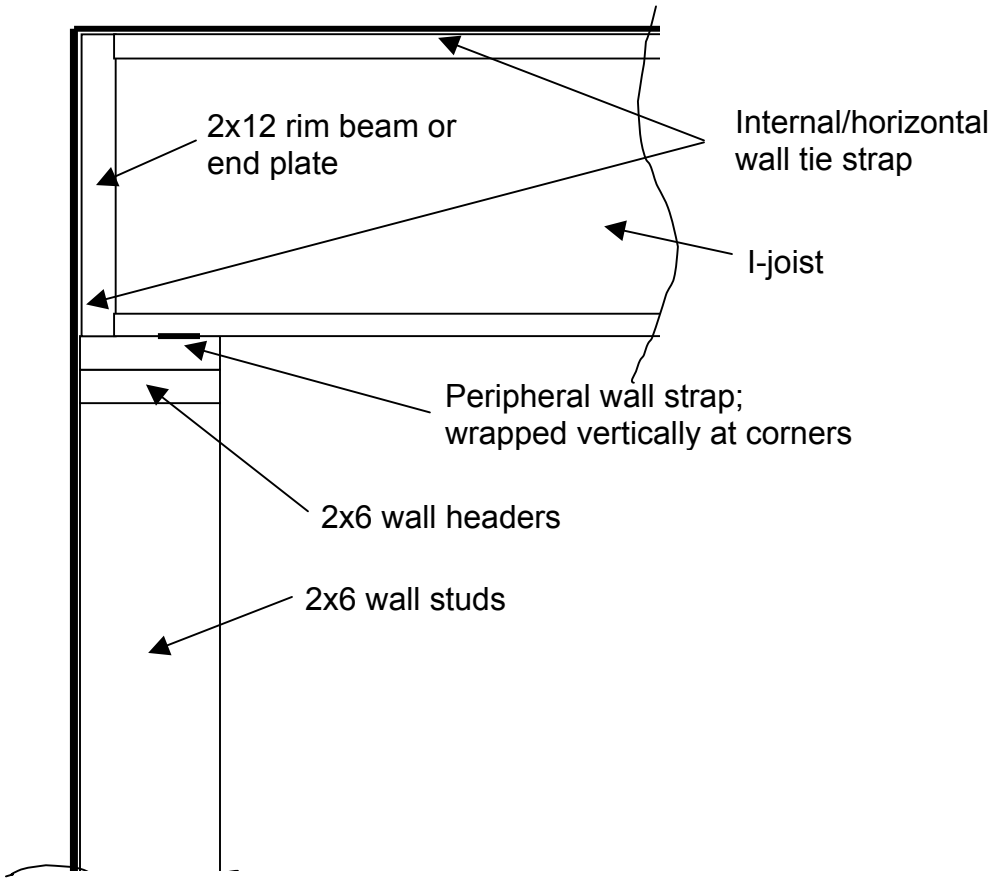

Figure F-5 Schematic of Peripheral and Horizontal Ties; E-W Detail

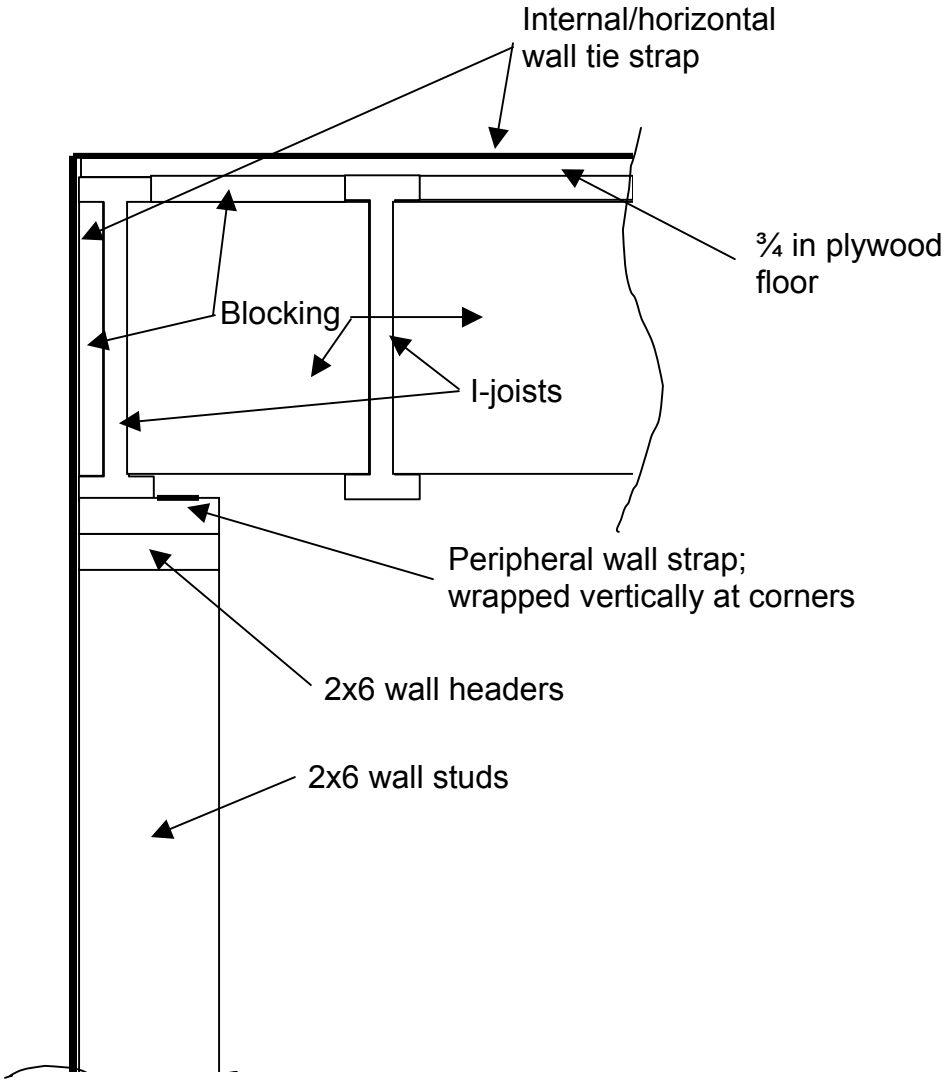

Figure F-6 Holdown Installation for Vertical Ties (Single Shear Shown)

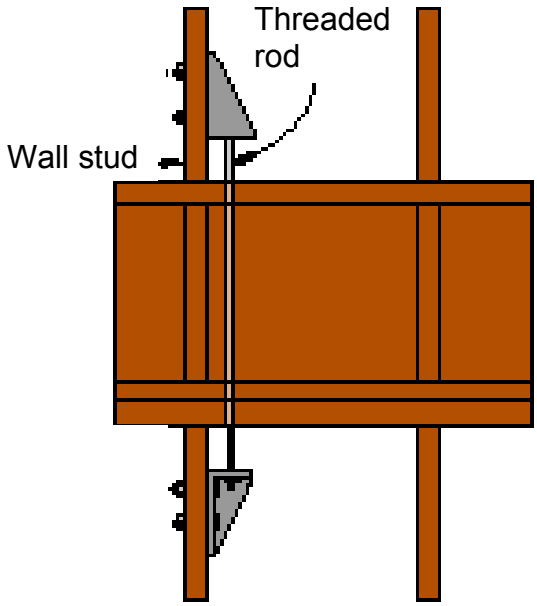

Table F-2 and the schematic details show that wood components can easily carry the required horizontal tie forces, and connections can be designed to transfer vertical tie requirements. The number of connections and the connection details for vertical tie forces can be substantial, however, depending on factored loads. Analysis using the alternate path method to show bridging in lieu of vertical tie capacity may provide a more economical solution, as discussed next.

F-3 ALTERNATE PATH METHOD FOR WOOD FRAME CONSTRUCTION.

Research on platform wood frame construction has shown potential mechanisms for bridging over removed members. One mechanism is sheathed walls acting as deep beams. Consideration should also be given to using a system of rim beans continuous around the building perimeter at each floor level and at interior load bearing walls. These rim beams can be designed to support the floor and wall above as part of the progressive collapse design. Figure F-7 illustrates the use of rim beams. Figure F-8 illustrates the bridging mechanism enabled through the use of rim beams. In addition, consideration should be given to building the floor such that the floor is supported on all sides, even though it is designed to span in one direction. Testing by TRADA and BRE in the UK demonstrated that the floor has additional strength through the transverse capacity of the floor that is supported on the walls parallel to the span. This is illustrated in Figure F-9.

These mechanisms will be investigated for the example facility to determine if bridging is preferable to developing the necessary vertical tie capacity.

Figure F-7 Illustrations of Rim Beam Use in Wood Frame Construction

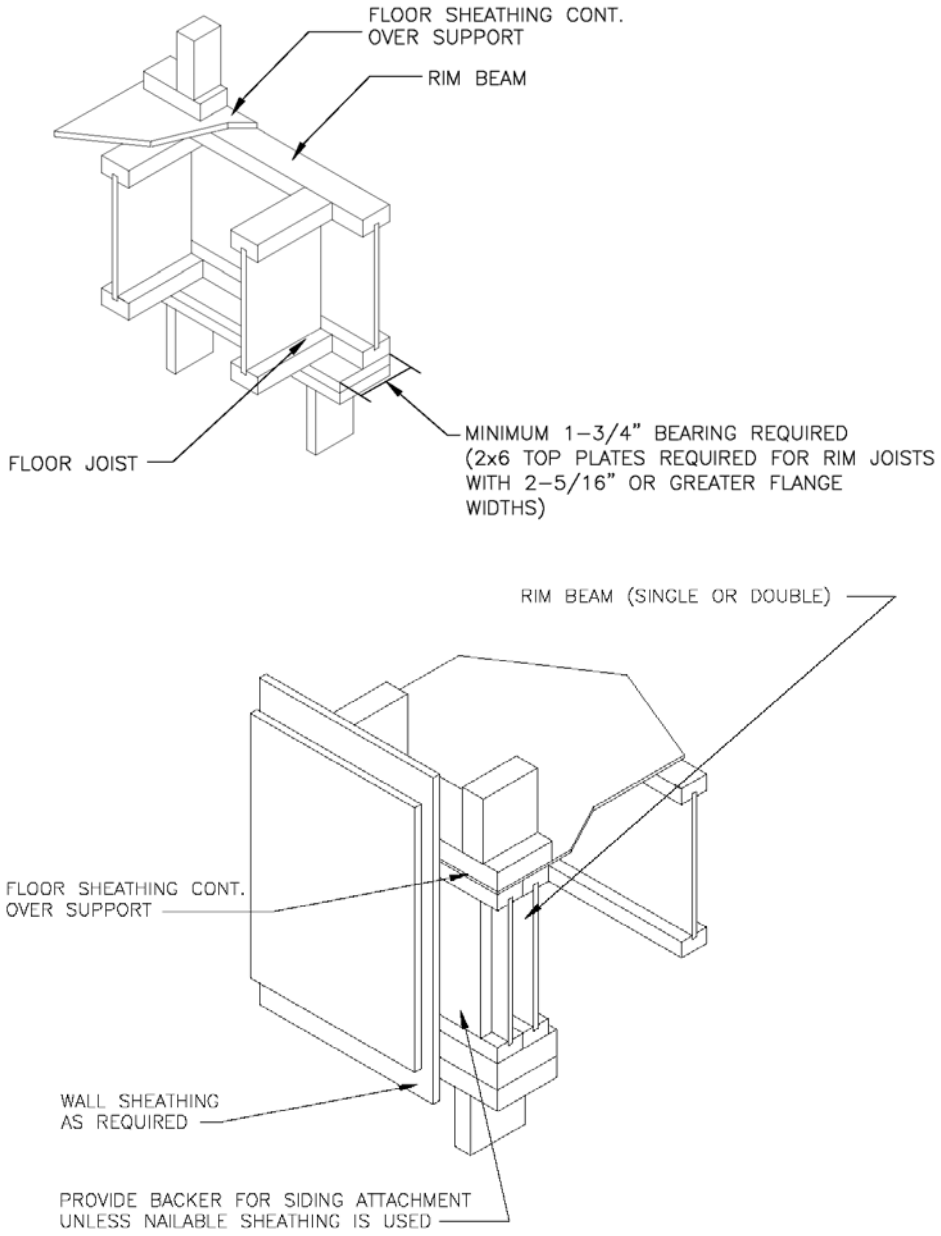

Figure F-8 Illustration of Potential Bridging Mechanism Utilizing Rim Beam

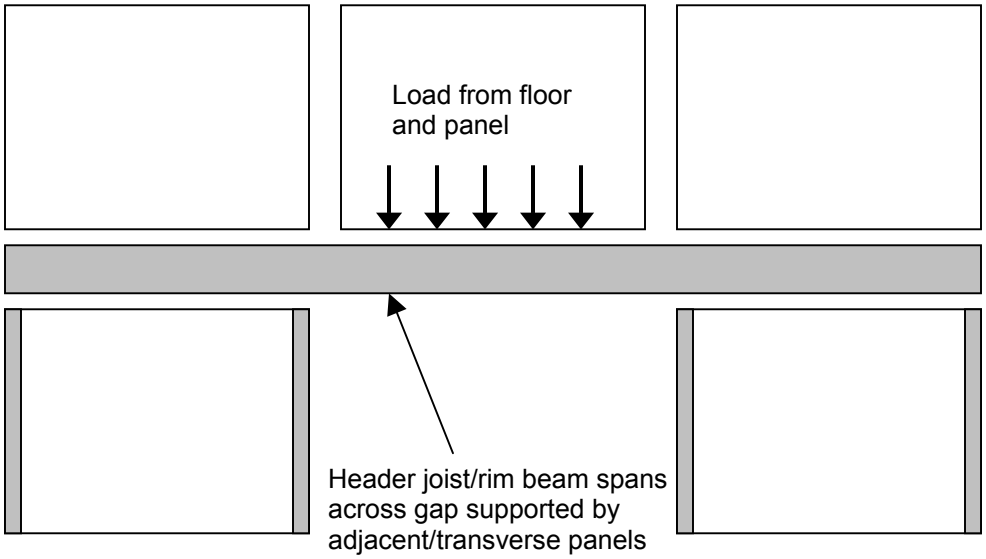

Figure F-9 Potential Redistribution of Floor Loads

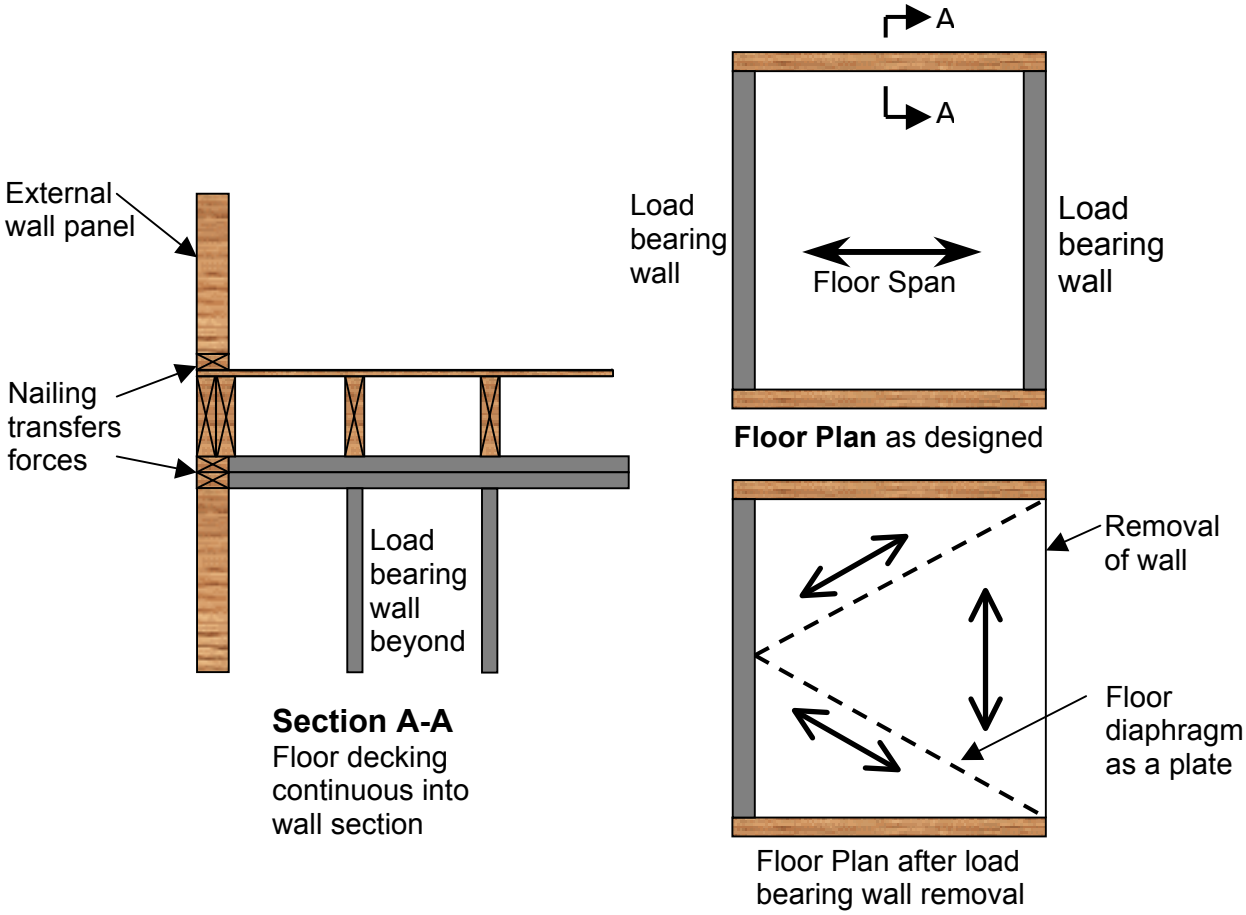

F-3.1 Example Building.

Continuing with the building defined in the Tie Force example, the use of bridging (Alternate Path) can be illustrated as an alternative to developing vertical tie capacity across all vertical studs in vertical load bearing elements. The load carrying elements of the structure were defined previously and are summarized in Table F-3.

Table F-3 Load Carrying Elements

Element	Section	Material
Walls (int and ext)	2x6 @ 16” 0.C.	Southern Yellow Pine (SYP) No. 2
Columns	4 – 2x6	SYP No. 2
Rim Beam	8x12	SYP No. 2
Girder	8x12	SYP No. 2
Floor Joists	11.9” engineered I-Joists	Engineered Wood

Loading was specified in the Tie Force example and is summarized in Table F-4.

Table F-4 Applied Loading (unfactored)

Level or Element	Dead	Live
Roof	20 psf	20 psf
3rd Floor	15 psf	55 psf
2nd Floor	15 psf	55 psf
Exterior wall section including sheathing	6.5 psf	
Brick Cladding (supported at ground, 2nd , and 3rd floor levels)	40 psf	
Rim Beam / Girder (est.)	25 plf	

As specified in Section 3-2, the alternate path method is applied to each deficient vertical load-carrying element. The rim beam and the wall section may be used to bridge deficient vertical elements. For this structure, it is necessary to show alternate paths for interior and exterior columns and load bearing walls. The facility is being designed for a Low LOP. Only a portion of the elements will be illustrated in this example.

F-3.1.1 Case 1 – Removal of Column in N-S Exterior Wall.

The proposed bridging mechanism is for the rim beam supporting the column and girder reaction to redistribute the loads to adjacent wall studs. In this case, the rim beam is running parallel to the floor joists. The floor sheathing is continuous over the top of the rim beam and therefore a tributary width of floor load is transferred to the exterior wall. The rim beam at each level is considered to carry the loads at its level, including the weight of the brick cladding, wall section, tributary floor load, and girder reaction.

Figure F-10 illustrates the cross section of the north-south exterior wall and a representative elevation showing the column to be removed. The rim beam will have to bridge 32 inches to wall studs adjacent to the removed column. The factored load is calculated in accordance with Section 3-2.4.2.

Table F-5 Acceptability Criteria Check for 8 x 12 S.Y.P. No. 2 Rim Beam

Structural Behavior	Demand	Capacity	Notes
Element Flexure	M_u- = -38.1 k-in M_u+ = 33.8 k-in	$\phi\lambda M'$ = 303.5 k-in	OK, size could be reduced to 4x12, however other load cases may govern
Combined Axial and Bending	NA	NA	Minimal Axial Load Effect
Shear	V_u = 5.3 k	$\phi\lambda V'$ = 12.5 k	OK
Connections	NA	NA	Not designed for this example
Deformation	Δ = negligible	θ = 3.7° or 1.03"	OK

Table F-6 Acceptability Criteria Check for Wall Studs

Structural Behavior	Demand	Capacity	Notes
Element Flexure	NA	NA	Assumed for example as compression member
Combined Axial and Bending	P_u = 13.6 k	2 – 2x6 wall studs - $\phi\lambda P'$ = 25.25 k	OK. Assumed bending load is negligible for example
Shear	NA	NA	OK - Assumed shear load is negligible for example
Connections	NA	NA	Not designed for this example
Deformation	NA	NA	

Table F-5 shows that the rim beam is acceptable in redistributing the loads from the removed column. Table F-6 shows the adjacent wall studs are capable of supporting the increased load due to the redistribution. Therefore, this alternate path is acceptable in lieu of providing a vertical tie along the column. The rim beam size would be the same at the third floor and could be optimized for the roof level due to reduced loads. Design must also ensure that rim beam is continuous for at least 32” on either side of column. Alternate paths for other elements, such as load bearing wall removal, may govern the size and continuity detailing of the rim beam.

Figure F-10 Cross Section of North-South Exterior Wall

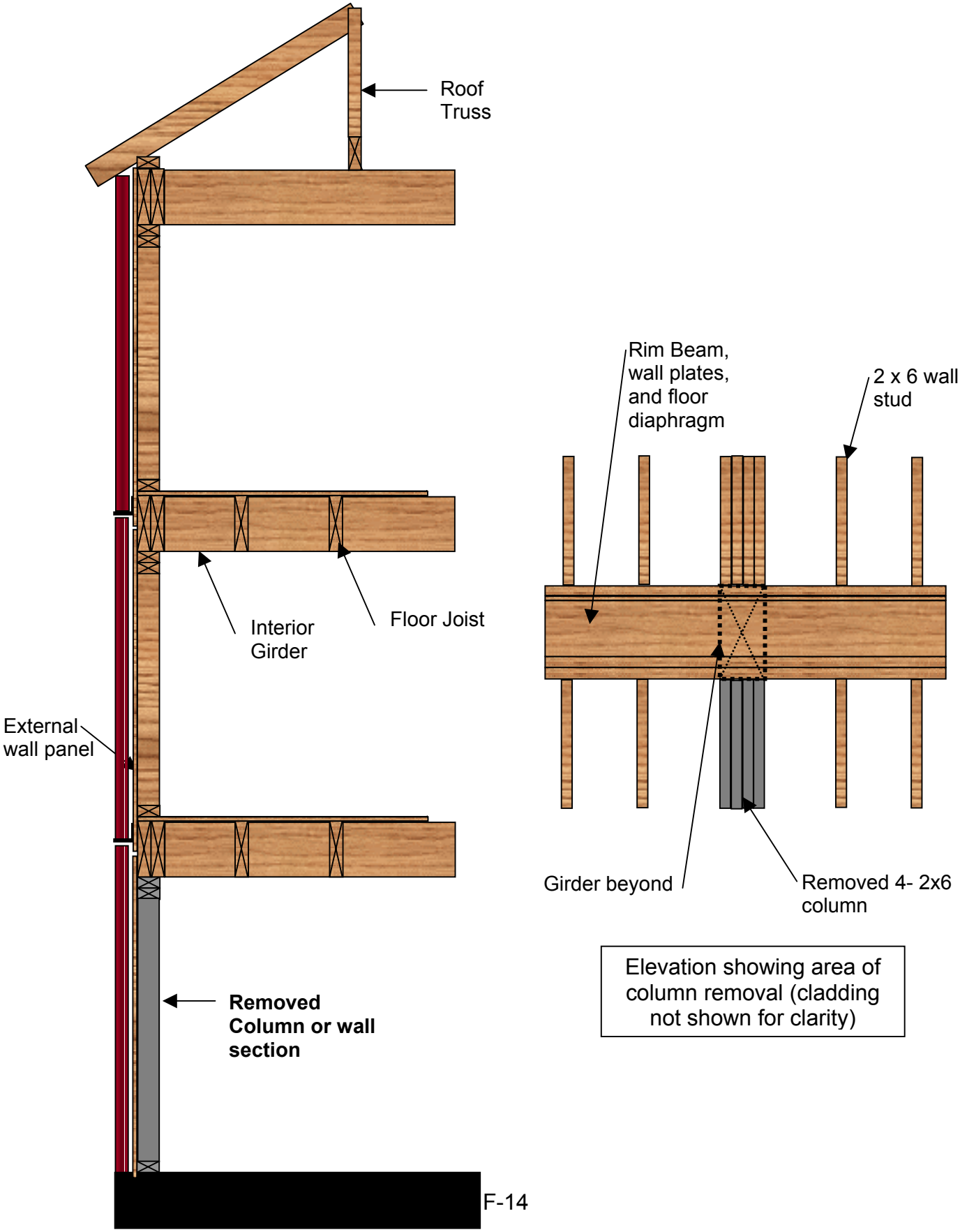

F-3.1.2 Case 2 – Removal of Interior Column.

Interior columns are located at 11'-0" on center in the east-west direction and approximately 13'-6" from the exterior walls in the north-south direction. The girder spans in the east-west direction. If the girder is detailed to be continuous, it can serve to redistribute loads if a column is lost. In accordance with Table 4-10, the column is removed for the clear height between lateral restraints, which is approximately 10'. The tributary area of the column is approximately 11' x 13'-6". The span of the girder is 22'-0" if a column is lost. It will be assumed that the rim beam at each level will be designed to span over the lost column; carrying the floor/roof loads at that level to adjacent columns. Therefore the girder is designed to span 22' carrying the dead and live loads at that level. The girder is braced laterally by the floor system. Although the ends of the member will have some fixity due to continuity, this example will assume simple span action. Tables F-7 and F-8 show the check of acceptability criteria for the girder and its supporting columns.

Table F-7 Acceptability Criteria Check for 8 x 12 S.Y.P. No. 2 Girder

Structural Behavior	Demand	Capacity	Notes
Element Flexure	M_u = 893 k-in	$\phi\lambda M'$ = 303.5 k-in	N.G., 6.75" x 12.375" 26F SYP Glulam O.K. $\phi\lambda M'$ = 952 k-in
Combined Axial and Bending	NA	NA	Minimal Axial Load Effect
Shear	V_u = 13.5 k	$\phi\lambda V'$ = 12.5 k	N.G., 6.75" x 12.375" 26F SYP Glulam O.K. $\phi\lambda V'$ = 23.6 k
Connections	NA	NA	Not designed for this example
Deformation	Δ = 5.68" 8x12 Δ = 4.35" Glulam	θ = 3.7° or 8.54"	N.G. (Deflection estimate invalid since beam fails)

Table F-8 Acceptability Criteria Check for Columns (4 – 2x6 SYP No. 2)

Structural Behavior	Demand	Capacity	Notes
Element Flexure	NA	NA	Assumed for example as compression member
Combined Axial and Bending	P_u = 46.5 k (adjacent span load using 3-2.3.1)	4 – 2x6 wall studs - $\phi\lambda P'$ = 50.5 k (IF braced in weak dir.; but dwgs do not specify)	N.G., 6x8 SYP No. 1 column sufficient if studs not braced in weak direction $\phi\lambda P'$ = 49.1 k
Shear	NA	NA	OK - Assumed shear load is negligible since shear walls take lateral loads
Connections	NA	NA	Not designed for this example
Deformation	NA	NA	

The analysis shows that for these spans and the loads shown in Table F-3, the 8 x 12 timber girder is not sufficient for the limit states of bending and shear. In addition, the 4- 2x6 columns that provide support to the girder are insufficient to support the reactions from the spans impacted by the column removal and the adjacent bay. When modeled as simply supported, the span would require a 6.75” x 12.375” 26F SYP glue laminated beam. In addition, the column would need to be a minimum of 6x8 SYP No. 1 column if un-braced in the weak direction.

If continuity were considered when the column is removed, the moment demand on the girder would be reduced. However, column demand may increase. Another option would be to use interior load bearing walls in a cellular layout, similar to Figure F-11. This avoids “frame” action and could reduce the amount of load to be redistributed. If these same load bearing walls acted as shear walls and were clad with structural sheathing, “deep beam” action of the wall panel may be possible. It is also remains an option to develop the vertical tie capacity and eliminate the need to show bridging.

Figure F-11 Cellular Layout

F-3.1.3 Case 3 – Removal of Load Bearing Wall.

The exterior wall in the east-west direction directly supports the floor joists. The tributary width of load is approximately 6'-0". As assumed in Case 2, each rim beam is considered to carry the loads at its level, including the weight of the brick cladding since this is an exterior wall. The floor-to-floor height was specified as 10 feet. In accordance with Table 7-1, the extent of wall to remove is the length between intersecting walls or columns with a minimum of 2.4 meters. In this case intersecting shear walls are located at 11'0" on center and this governs the length of wall to be removed. This is illustrated in Figure F-12. Therefore, the rim beam must redistribute the loads of an 11' section of exterior wall to the adjacent wall sections.

Since the window openings are not defined for this example, this illustration of procedure will assume a section of wall with no window. The loads were calculated in accordance with 3-2.4. Tables F-9 and F-10 show the check of acceptability criteria for the rim beam and the supporting wall section.

The analysis shows that the 8x12 rim beam is not sufficient for the limit states of bending and shear. In addition, the wall studs are insufficient for the concentrated axial reactions. The span would require a 5.125" x 12.375" 20F SYP glue laminated beam. The stud wall requires higher strength studs such as SYP select structural or higher number of studs to redistribute the added short-term vertical reactions.

Figure F-12 Notional Exterior Load Bearing Wall Removal

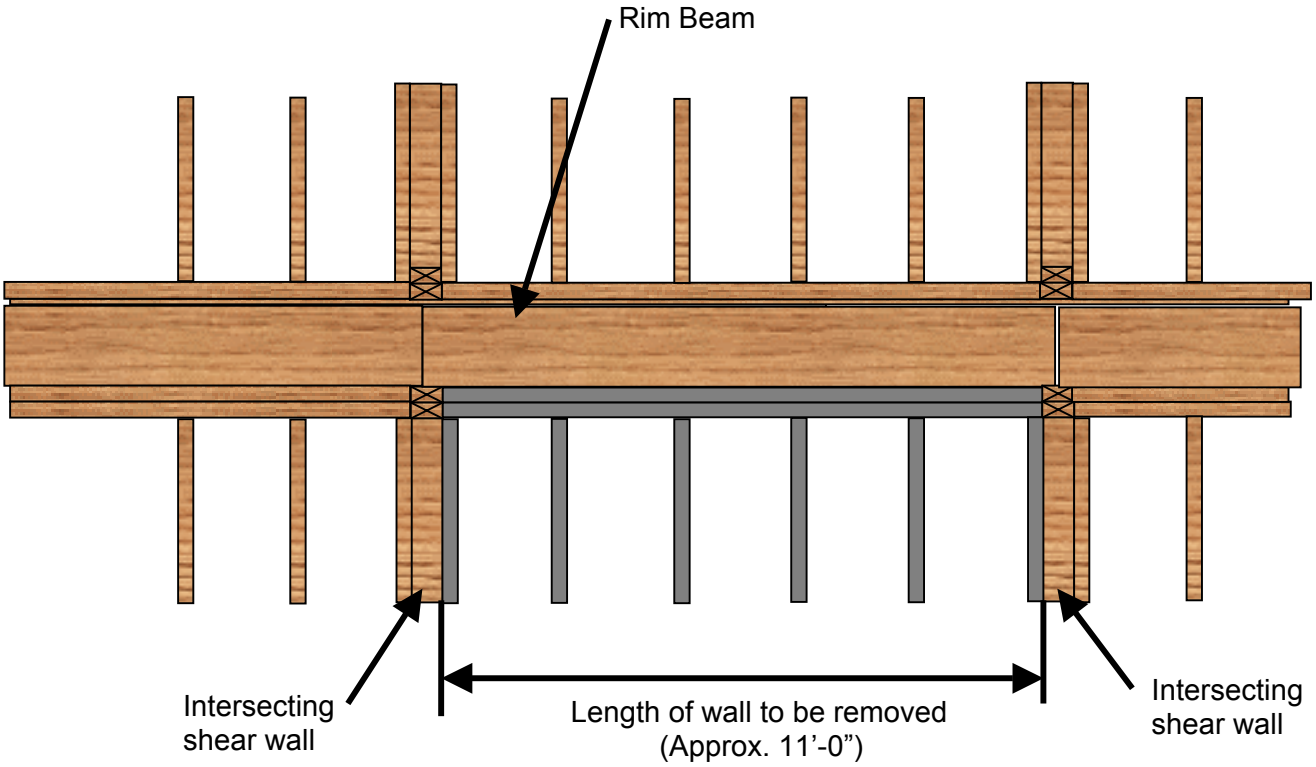

Table F-9 Acceptability Criteria Check for 8 x 12 S.Y.P. No. 2 Rim Beam

Structural Behavior	Demand	Capacity	Notes
Element Flexure	M_u- = 443.2 k-in	$\phi\lambda M'$ = 303.5 k-in	N.G., 5-1/8" x 12-3/8" 20F SYP Glulam O.K. $\phi\lambda M'$ = 551 k-in
Combined Axial and Bending	NA	NA	Minimal Axial Load Effect
Shear	V_u = 11.1 k	$\phi\lambda V'$ = 12.5 k	OK as is For 5-1/8" x 12-3/8" 20F SYP Glulam, $\phi\lambda V'$ = 17.8 k
Connections	NA	NA	Not designed for this example
Deformation	Δ = 0.42" Glulam	θ = 3.7° or 4.27"	OK

Table F-10 Acceptability Criteria Check for Wall Studs (2x6 SYP No. 2)

Structural Behavior	Demand	Capacity	Notes
Element Flexure	NA	NA	Assumed for example as compression member
Combined Axial and Bending	P_u = 26.7 k (per side of removed wall including upper floor reactions)	2 – 2x6 wall studs in end of shear wall - $\phi\lambda P'$ = 25.25 k (braced in weak dir. by sheathing)	N.G., if SYP select structural instead of No. 2 OK.
Shear	NA	NA	OK - Assumed shear load is negligible since shear walls take lateral loads
Connections	NA	NA	Not designed for this example
Deformation	NA	NA	

F-3.2 Summary of Alternate Path Example.

Cases 1 through 3 represent only some of the elements that would be removed to verify the capability to develop alternate paths in lieu of developing vertical tie capacity. Another area for investigation might include corner sections where the rim beam or wall section must cantilever to redistribute the loads from a removed element. In addition, it may be possible to optimize the member sizes at the various levels of the structure to achieve greater economy.

The analysis presented showed that the proposed framing scheme and member sizes were insufficient in some cases to develop alternate paths, however, reasonable modifications could be made to the members to provide an alternate path. It is also possible to consider other mechanisms not shown in the analysis. One example would be “deep” beam action of the wall panels above the area or element removed. Properly detailed, rated structural sheathing can carry the shear, while rim beams can act as chords of the beam carrying only tension or compression.

The analysis also did not consider the potential redistribution of floor loads when the floor sheathing is supported on the walls parallel to the span of the floor system. If this redistribution can be shown, the demand on the rim beam or other resisting elements can be reduced.

APPENDIX G

2003 INTERNATIONAL BUILDING CODE MODIFICATIONS FOR CONSTRUCTION OF BUILDINGS TO RESIST PROGRESSIVE COLLAPSE

The following narrative identifies required modifications to the provisions of the *2003 International Building Code* (2003 IBC) addressing construction documents, structural tests and special inspections for buildings that have been designed to resist progressive collapse. The modifications reference specific sections in the 2003 IBC that require modification. Apply 2003 IBC requirements except as modified herein. The required 2003 IBC modifications are one of two actions, according to the following legend:

LEGEND FOR ACTIONS

[Addition] -- New section added, includes new section number not shown in 2003 IBC.

[Replacement] -- Delete referenced 2003 IBC section and replace it with the narrative shown.

Chapter 16 Structural Design

1603 construction documents

1603.1.9 [Addition] Progressive Collapse design data. The following information shall be indicated on the construction documents:

1. General note stating the follow:

   Design of the building is in accordance with UFC 4-023-03, DD/MM/YYYY. Future additions or alterations to this structure shall not jeopardize the requirements for progressive collapse resistance.

2. Level of Protection design requirement (VLLOP, LLOP, MLOP, HLOP).

3. Method of progressive collapse resistance (Tie Force, Tie Force and/or Bridging, Bridging).

1603.1.10 [Addition] Systems and components requiring special inspections for progressive collapse resistance. Construction documents or specifications shall be prepared for those systems and components requiring special inspection for progressive collapse resistance and shall be submitted for approval as specified in section 1717.1 by the registered design professional responsible for their design and shall be submitted for approval in accordance with section 106.1.

Chapter 17 Structural Tests and Special Inspections

1701.1 [Replacement] Scope The provisions of this chapter shall govern the quality, workmanship and requirements for materials covered. Materials of construction and tests shall conform to the applicable standards listed in this code.

1716 [Addition] QUALITY ASSURANCE FOR PROGRESSIVE COLLAPSE REQUIREMENTS

1716.1 [Addition] Scope A quality assurance shall be provided in accordance with Section 1716.1.1.

1716.1.1 [Addition] When required. A quality assurance plan for progressive collapse requirements shall be provided for the following structures designed for various levels of protection as follows:

1. Structures designed to a Very Low Level of Protection (VLLOP) and Low Level of Protection (LLOP) where horizontal and vertical structural element(s) provide horizontal and vertical tie force capacity.

2. Structures designed to a Low Level of Protection (LLOP) where vertical structural element(s) cannot provide vertical tie force capacity and the alternate path (AP) method is utilized to bridge over the deficient element(s).

3. Structures designed to Medium Level of Protection (MLOP) or High Level of Protection (HLOP).

1716.1.2 [Addition] Detailed requirements. When required by Section 1716.1.1, a quality assurance plan shall provide for the following:

1. Horizontal and vertical tie force connections as required based on material type.

2. Roof and floor diaphragm systems including internal and peripheral ties; and ties to edge columns, corner columns and walls.

3. Roof and floor connections resisting uplift load requirements.

4. Vertical progressive collapse resisting systems including vertical ties and bridging connections.

5. Perimeter ground floor columns and walls with enhanced ductility requirements to ensure shear capacity is greater than the flexural capacity (MLOP and HLOP structures)

1716.2 [Addition] Quality assurance plan preparation. The design of each designated progressive collapse resisting system shall include a quality assurance plan prepared by the registered design professional. The quality assurance plan shall identify the following:

1. The designated progressive collapse resisting systems and elements that are subject to quality assurance in accordance 1716.1.

2. The special inspections and testing to be provided as required by sections 1704 and other applicable sections of this code, including the applicable standards reference by this code.

3. The type and frequency of testing required.

4. The type and frequency of special inspections required.

5. The required frequency and distribution of testing and special inspection reports.

6. The structural observations to be performed.

7. The required frequency and distribution of structural observation reports.

1716.3 [Addition] Contractor responsibility. Each contractor responsible for the construction of the progressive collapse resisting system or progressive collapse component listed in the quality assurance plan shall submit a written contractor's statement of responsibility to the contracting officer prior to the commencement of work on the system or component. The contractor's statement of responsibility shall contain the following.

1. Acknowledgement of awareness of the special requirements contained in the quality assurance plan;

2. Acknowledgement that control will be exercised to obtain conformance with the construction documents approved by the building official;

3. Procedures for exercising control within the contractors organization, the method and frequency of reporting the distribution of reports; and

4. Identification and qualification of the person(s) exercising such control and their position(s) in the organization.

1717 [Addition] SPECIAL INSPECTIONS FOR PROGRESSIVE COLLAPSE RESISTANCE

1717.1 [Addition] General. Special inspections for progressive collapse resistance shall follow the requirements of Section 1704.1. Special inspections itemized in Sections 1717.2 through 1717.4 are required for the following:

1. Structures designed to a Very Low Level of Protection (VLLOP) and Low Level of Protection (LLOP) where horizontal and vertical structural element(s) provide horizontal and vertical tie force capacity.

2. Structures designed to a Low Level of Protection (LLOP) where vertical structural element(s) cannot provide vertical tie force capacity and the alternate path (AP) method is utilized to bridge over the deficient element(s).

3. Structures designed to Medium Level of Protection (MLOP) or High Level of Protection (HLOP).

1717.2 [Addition] Structural steel. Continuous special inspection for structural welding in accordance with AWS D1.1, including floor and roof deck welding.

Exemptions:

1. Single pass fillet welds not exceeding 5/16” (7.9mm) in size.

1717.3 [Addition] Structural Wood. Periodic special inspections during nailing, bolting, anchoring and other fastening of components within the progressive collapse resisting system, including horizontal tie force elements, vertical tie force elements and bridging elements.

1717.4 [Addition] Cold–formed steel framing. Periodic special inspections during welding operations, screw attachment, bolting, anchoring and other fastening of components within the progressive collapse resisting system, including horizontal tie force elements, vertical tie force elements and bridging elements.

1717.5 [Addition] Cast-in-place concrete. Continuous special inspection for reinforcing steel placement with a particular emphasis on reinforcing steel anchorages, laps and other details within the progressive collapse resisting system, including horizontal tie force elements, vertical tie force elements and bridging elements.

1718 STRUCTURAL OBSERVATIONS

1718.1 [Addition] Structural observations. Structural observations shall be provided for the progressive collapse resisting systems as follows:

1. When the contracting officer requires such observation.

2. In structures designed to Medium Level of Protection (MLOP) or High Level of Protection (HLOP).

The structural engineer of record (SER) should perform the structural observations as defined in Section 1702. In lieu of the SER, a registered design professional with experience in and knowledge of structural engineering principles and practices shall perform the structural observations.

2. Structures designed to a Low Level of Protection (LLOP) where vertical structural element(s) cannot provide vertical tie force capacity and the alternate path (AP) method is utilized to bridge over the deficient element(s).

3. Structures designed to Medium Level of Protection (MLOP) or High Level of Protection (HLOP).

1717.2 [Addition] Structural steel. Continuous special inspection for structural welding in accordance with AWS D1.1, including floor and roof deck welding.

Exemptions:

1. Single pass fillet welds not exceeding 5/16” (7.9mm) in size.

1717.3 [Addition] Structural Wood. Periodic special inspections during nailing, bolting, anchoring and other fastening of components within the progressive collapse resisting system, including horizontal tie force elements, vertical tie force elements and bridging elements.

1717.4 [Addition] Cold–formed steel framing. Periodic special inspections during welding operations, screw attachment, bolting, anchoring and other fastening of components within the progressive collapse resisting system, including horizontal tie force elements, vertical tie force elements and bridging elements.

1717.5 [Addition] Cast-in-place concrete. Continuous special inspection for reinforcing steel placement with a particular emphasis on reinforcing steel anchorages, laps and other details within the progressive collapse resisting system, including horizontal tie force elements, vertical tie force elements and bridging elements.

1718 STRUCTURAL OBSERVATIONS

1718.1 [Addition] Structural observations. Structural observations shall be provided for the progressive collapse resisting systems as follows:

1. When the contracting officer requires such observation.

2. In structures designed to Medium Level of Protection (MLOP) or High Level of Protection (HLOP).

The structural engineer of record (SER) should perform the structural observations as defined in Section 1702. In lieu of the SER, a registered design professional with experience in and knowledge of structural engineering principles and practices shall perform the structural observations.