US Army Corps of Engineers®

PDC TR-15-01
August 2015

Protective Design Center Technical Report

Minimum Standoff Distances for Non-Load-Bearing Steel Stud In-Fill Walls

Prepared for
USACE Protective Design Center
Omaha District

DISTRIBUTION STATEMENT A:
Approved for public release: Distribution Unlimited.

This page intentionally left blank.

Table of Contents

1. Purpose **1**
2. Application 1
2.1 Ultimate Recipients 1
3. References 1
3.1 Department of Defense (DOD) 1
3.2 Air Force 1
3.3 U.S. Army 1
3.4 Gypsum Association (GA): 1
4. Acronyms 1
5. Objective 2
6. Applicability of Steel Stud Construction Techniques 2
7. Structure Description 2
7.1 Construction Criteria 2
7.2 Additional Resistance 2
8. Construction on Non-Loading Bearing Steel Stud In-fill Walls 3
8.1 Construction Details 3
8.2 Standoff 3
9. Cost Estimates 4
10. Piont of Contact (POC) 4
Appendix A A-1
Table A1.Analysis Assumptions A-2
Table A1.2 Minimum Standoff Distances A-3
Appendix B B-1
B.1 UFGS 05 40 00, *COLD-FORMED METAL FRAMING* B-2
Appendix C C-1
B.1 Wall Construction Details C-2

This page intentionally left blank.

1. Purpose. This PDC-TR provides criteria for the construction of facilities containing non-load-bearing steel stud in-fill walls with masonry or lightweight sheathing.

2. Application: All Air Force, Army and Navy facilities

2.1. Ultimate Recipients: All major command (MAJCOM) civil engineer offices, base civil engineers (BCE), and responsible U.S. Army Corps of Engineers (USACE) and Naval Facilities Engineering Command (NAVFACENGCOM) offices acting as design/construction agents for DOD projects or facilities on DOD property.

3. References.

3.1. Department of Defense (DOD)

- Unified Facilities Criteria (UFC) 4-010-01, *DOD Minimum Antiterrorism Standards for Buildings*, http://www.wbdg.org/ccb/browse_cat.php?o=29&c=4
- UFC 4-020-01, *DOD Security Engineering Facilities Planning Manual*, http://www.wbdg.org/ccb/browse_cat.php?o=29&c=4

3.2. Air Force:

- AFI 32-1023, *Design and Constructing Military Construction Projects*, http://www.e-publishing.af.mil/
- AFCEC-CX-TY-TP-2013-0011, *Development of Impulse Curves for Conventional Steel Stud Infill Walls,* https://www.dtic.mil/REGateway/welcome

3.3. U.S. Army:

- Protective Design Center Technical Report (PDC TR) 06-08, *Single-Degree-of-Freedom Structural Response Limits for Antiterrorism Design*, https://pdc.usace.army.mil/library/
- PDC TR-10-01, *Conventional Construction Standoff Distances of the Low and Very Low Levels of Protection IAW UFC 4-010-01*, https://pdc.usace.army.mil/library/

3.4. Gypsum Association (GA):

- GA-235-10, *Gypsum Board Typical Mechanical and Physical Properties*, https://www.gypsum.org/wp/wp-content/uploads/2011/11/GA-235-10.pdf

4. Acronyms:

AFI	- Air Force instruction
ASTM	- American Society for Testing and Materials
CFSS	- cold-formed steel stud
DOD	- Department of Defense
EIFS	- exterior insulation and finish system
ft	- foot
ga	- gauge
HLOP	- high level of protection

LLOP	- low level of protection
LS-DYNA	- advanced general-purpose multiphysics simulation software developed by Livermore Software Technology Corporation
MAJCOM	- major command
mm	- millimeter
MLOP	- medium level of protection
MPa	- megapascal
MWFRS	- main wind force resisting system
psf	- per square foot
psi	- pounds per square inch
SSW	- Steel Stud Wall
UFC	- Unified Facilities Criteria
UFGS	- Unified Facilities Guide Specification
VLLOP	- very low level of protection

5. Objective. Many Air Force and other DOD facilities are constructed with either reinforced concrete or steel as the main wind force resisting system (MWFRS). Typically, those structures contain in-fill walls that are non-load bearing and can be behind either brick or exterior insulation and finish system (EIFS) veneers. The objective of this PDC-TR is to provide prescriptive cold-formed steel stud (CFSS) wall construction details to enable designers and planners to reduce building standoff requirements prescribed by UFC 4-010-01, *DOD Minimum Antiterrorism Standards for Buildings*.

6. Applicability of Steel Stud Construction Techniques. The construction outlined in this PDC-TR is applicable to all facilities containing steel stud in-fill walls with simply supported end connections to structural concrete load-bearing elements of the facility. CFSS in-fill walls with other types of end connections were not investigated and are not included due to lack of test validation of performance under reduced standoff. When the construction detailing and criteria in this PDC-TR is followed, the facility standoff provided in Appendix A, Table A1.2, may be used in lieu of UFC 4-010-01, Tables B-1 and B-2.

7. Structure Description.

7.1. Construction Criteria: The construction criteria in this PDC-TR apply directly to new and existing buildings with reinforced concrete MWFRS with non-load-bearing CFSS in-fill walls where simply supported end connections are made directly to the structural concrete frame. Construction of these CFSS walls in steel frame MWFRSs are only applicable when CFSS end connections are made to the facility's concrete diaphragm or to another concrete structural member that transfers lateral blast loads to the steel MWFRS.

7.2. Additional Resistance: The additional resistance gained from sheathing–stud composite action is essential to the increased performance for the in-fill walls. The following minimum sheathing properties are required for the application of this PDC-TR. Due to the variability of material tolerance specifications from the U.S. Gypsum Association and the American Plywood Association, the engineer of record must verify that the specified

sheathing properties fall within the ranges provided below and will be appropriate for blast-resistant, non-load-bearing steel stud walls.

7.2.1. The interior (tension) face of the non-load-bearing steel stud wall must be sheathed with a product with minimum strength characteristics of gypsum board as defined by GA-235-10, *Gypsum Board Typical Mechanical and Physical Properties*, but not to exceed strength characteristics of 1.90 millimeter (14 gauge) (0.0747 inch) sheet metal, galvanized steel, ASTM A653/A653M, SS Grade 50, class 1.

7.2.2. The exterior (compression) face of the non-load-bearing steel stud wall must be sheathed with a product with minimum strength characteristics of 5/8 inch oriented strand board but not to exceed strength characteristics of 1.90 mm (14 ga) (0.0747 in) sheet metal, galvanized steel, ASTM A653/A653M, SS Grade 50, class 1.

7.2.3. The steel stud wall fasteners should be visually inspected. Each stud-to-track connection must have the number of screws as specified by the drawings in Attachment 3. Sheathing fastener spacing shall adhere to the drawings in Appendix C.

8. Construction of Non-Load-Bearing Steel Stud In-fill Walls. Steel stud walls offer an economical option for protecting DOD facilities against blast loads. The key to ensuring proper wall behavior is detailing in accordance with the construction drawings in Appendix C. Construction installation must follow UFGS 05 40 00, *Cold-Formed Metal Framing*, as amended in Appendix B..

8.1. Construction Details. Wall construction details are in Appendix C.

8.2. Standoff.

8.2.1. The standoff distances apply to all new and existing DOD buildings required to comply with UFC 4-010-01. They address standoff distances to the controlled perimeters and to parking areas, roadways, and trash containers within the controlled perimeter. The standoff distances are presented in Appendix A, Table A1.2, for each applicable CFSS wall type. Standoff distances provided in Appendix A, Table A1.2, may be used for the building's CFSS wall components only. All other facility structural components—including windows and doors and structural support for those windows and doors—must be designed for the applicable standoff distances in accordance with UFC 4-010-01.

8.2.2. Determine standoff distances for non-load-bearing CFSS walls that do not comply with the construction criteria provided in Appendix A, Table A1.1, or constructed in accordance with the drawings in Appendix C. For example, if the facility stud wall span exceeds 10 feet then the prescribed standoff distance in Appendix A, Table A1.2, would be invalid. For CFSS walls with characteristics outside of those prescribed in Appendix A, Table A1.1, UFC 4-010-01, paragraph B-1.1.3, allows engineers experienced in blast-resistant design to analyze the building and apply building hardening as necessary to mitigate the effects of the applicable explosives. Detailed design parameters and

procedures for mitigating explosive effects and meeting the levels of protection are provided in PDC TR-06-08, *Single-Degree-of-Freedom Structural Response Limits for Antiterrorism Design,* and AFCEC-CX-TY-TP-2013-0011, *Development of Impulse Curves for Conventional Steel Stud Infill Walls*.

9. Cost Estimates. Cost estimates for steel stud construction will be affected by the size, complexity, condition, and accessibility of the structure. Steel stud material costs for the walls in Appendix A, with labor, are roughly $25 to $27 per square foot (in 2013), which does not include the cost of veneer.

10. Point of Contact (POC). Recommendations for improvements to this PDC-TR are encouraged and should be furnished to the U. S. Army Corps of Engineers, Protective Design Center, 1616 Capitol Avenue, Omaha, NE 68102, phone 402-995-2366, e-mail, pdc.web@usace.army.mil or the Antiterrorism SME, 139 Barnes Drive, Suite 1, Tyndall AFB, FL 32408-5319, Phone 850-283-6119, e-mail AFCEC.RBC@tyndall.af.mil.

Appendix A.

STANDOFF DISTANCES

Table A1.1. Analysis Assumptions

Analysis Assumptions[2][4][5][6][7][8]					
Name	**Wall Type [1]**	**Sections**	**Span**	**Supported Weight**	**Stud-to-Track Connection**
SSW1	Steel studs - EIFS veneer[3]	600S162-54 600T300-54	10 ft	10 psf	3-#12 screws
SSW2	Steel studs - 18ga sheet steel - brick veneer [3]	600S162-54 600T300-54	10 ft	44 psf	3-#12 screws
SSW3	Steel studs - EIFS veneer[3]	600S162-43 600T300-43	10 ft	10 psf	3-#12 screws
SSW4	Steel studs - 18ga sheet steel - brick veneer[3]	600S162-33 600T300-43	10 ft	44 psf	3-#12 screws
SSW5	Steel studs - brick veneer[3]	600S137-33 600T300-43	10 ft	44 psf	Deflection clip with 3-#12 screws
SSW6	Steel studs - EIFS veneer[3]	600S200-97 600T300-97	10 ft	10 psf	6-#12screws
SSW7	Steel studs - brick veneer[3]	600S137-33 600T150-33	10 ft	44 psf	1-#12 screw
SSW8	Steel studs - EIFS veneer[3]	600S137-33 600T150-33	10 ft	10 psf	1-#12 screw

1. Types of construction other than that shown in this table may be permissible subject to validation by the designer of record.
2. See PDC Technical Report 10-01 for details on analysis assumptions and material properties.
3. Steel studs are connected top and bottom with screws unless deflection clips or deflection track is specified.
4. Steel stud minimum static strength shall be 50,000 psi (345 MPa).
5. Concrete anchors shall be 0.5 inch minimum diameter with minimum 15.6 kip tension capacity.
6. Concrete anchors and steel studs shall be placed at 16 inches on center maximum.
7. Support conditions for each wall in this PDC-TR shall be assumed to be Simple-Simple.

Table A1.2. Minimum Standoff Distances

Wall	Drawing Number	Applicable explosive weight	UFC Conventional Designation/ Standoff for LLOP	LS-DYNA standoff for HLOP	LS-DYNA standoff for MLOP	LS-DYNA standoff for LLOP	LS-DYNA standoff for VLLOP
SSW1	130200	I	C/420 ft	223 ft	148 ft	82 ft	72 ft
SSW1	130200	II	G/167 ft	82 ft	65 ft	35 ft	30 ft
SSW2	130201	I	C/207 ft	120 ft	55 ft	45 ft	N/A*
SSW2	130201	II	G/82 ft	50 ft	24 ft	20 ft	N/A*
SSW3	130202	I	C/207 ft	250 ft	120 ft	97 ft	70 ft
SSW3	130202	II	G/82 ft	100 ft	50 ft	40 ft	30 ft
SSW4	130203	I	C/420 ft	148 ft	95 ft	47 ft	N/A*
SSW4	130203	II	G/167 ft	65 ft	40 ft	20 ft	N/A*
SSW5	130204	I	C/207 ft	170 ft	135 ft	72 ft	65 ft
SSW5	130204	II	G/82 ft	70 ft	55 ft	30 ft	28 ft
SSW6	130205	I	C/420 ft	130 ft	100 ft	82 ft	70 ft
SSW6	130205	II	G/167 ft	54 ft	42 ft	35 ft	30 ft
SSW7	130206	I	C/207 ft	170 ft	95 ft	60 ft	N/A*
SSW7	130206	II	G/82 ft	70 ft	40 ft	25 ft	N/A*
SSW8	130207	I	C/420 ft	361 ft	148 ft	130 ft	122 ft
SSW8	130207	II	G/167 ft	151 ft	65 ft	54 ft	50 ft

*N/A refers to inadequate data to properly define a very low level of protection (VLLOP) standoff distance; therefore, minimum standoff should be limited to low level of protection (LLOP). For a definition of each level of protection (LOP), see UFC 4-020-01.

This page intentionally left blank.

Appendix B

B.1 UFGS 05 40 00, *COLD-FORMED METAL FRAMING.* UFGS 05 40 00, as amended to meet the requirements of this PDC-TR, is available on the Whole Building Design Guide Web site http://www.wbdg.org/ccb/.....

UNIFIED FACILITIES GUIDE SPECIFICATIONS

References are in agreement with UMRL dated October 2013
****

SECTION TABLE OF CONTENTS

DIVISION 05 - METALS

SECTION 05 40 00

COLD-FORMED METAL FRAMING

05/10

PART 1 GENERAL

1.1 REFERENCES
1.2 SUBMITTALS
1.3 DELIVERY, STORAGE, AND HANDLING
1.4 LOAD-BEARING COLD-FORMED METAL FRAMING
1.5 MAXIMUM DEFLECTION
1.6 QUALITY ASSURANCE
1.6.1 Drawing Requirements
1.6.2 Design Data Required

PART 2 PRODUCTS

2.1 STEEL STUDS, JOISTS, TRACKS, BRACING, BRIDGING AND ACCESSORIES
2.1.1 Studs and Joists of 1.37 mm 16 Gage (0.0538 Inch) and Heavier
2.1.2 Studs and Joists of 1.2 mm 18 Gage (0.0478 Inch) and Lighter
2.1.3 Sizes, Gages, Section Modulus, and Other Structural Properties
2.2 MARKINGS
2.3 CONNECTIONS
2.4 PLASTIC GROMMETS

PART 3 EXECUTION

3.1 FASTENING
3.1.1 Welds
3.1.2 Screws
3.1.3 Anchors
3.1.4 Powder-Actuated Fasteners
3.2 INSTALLATION
3.2.1 Tracks
3.2.2 Studs
3.2.3 Joists and Trusses
3.2.4 Erection Tolerances

-- End of Section Table of Contents --

****

USACE / NAVFAC / AFCEC / NASA	**UFGS-05 40 00 (May 2010)** **Change 1 - 08/12**

Preparing Activity: NAVFAC	**Superseding** **UFGS-05 40 00 (April 2006)**

UNIFIED FACILITIES GUIDE SPECIFICATIONS

References are in agreement with UMRL dated October 2013

****

SECTION 05 40 00

COLD-FORMED METAL FRAMING

05/10

****

NOTE: The following information shall be shown on the project drawings:

1. The extent and location of all framing indicating gage, size, section modulus, and other structural properties required.

2. Connections and other installation details.

3. Indicate concentrated loads, e.g., pipe supports, that may overstress a flange or connection.

****

PART 1 GENERAL

1.1 REFERENCES

****

The publications listed below form a part of this specification to the extent referenced. The publications are referred to within the text by the basic designation only.

AMERICAN IRON AND STEEL INSTITUTE (AISI)

AISI S100	(2007; Supp 1: 2009; Supp 2: 2010) North American Specification for the Design of Cold-Formed Steel Structural Members
AISI S200	(2007) North American Standard for Cold-Formed Steel Framing - General Provision
AISI S201	(2007) North American Standard for Cold-Formed Steel Framing - Product Data
AISI S202	(2011) Code of Standard Practice for Cold-formed Steel Structural Framing
AISI S211	(2007) North American Standard for Cold-Formed Steel Framing - Wall Stud Design
AISI S212	(2007) North American Standard for Cold-Formed Steel Framing - Header Design
AISI S213	(2007; Suppl 1 2009) North American Standard for Cold-Formed Steel Framing - Lateral Design
AISI SG02-KIT	(2001; Supp 1 2004) North American Specification for the Design of Cold-Formed Steel Structural Members

AISI SG03-3	(2002; Suppl 2001-2004; R 2008) Cold-Formed Steel Design Manual Set

AMERICAN WELDING SOCIETY (AWS)

AWS D1.1/D1.1M	(2010; Errata 2011) Structural Welding Code - Steel
AWS D1.3/D1.3M	(2008; Errata 2008) Structural Welding Code - Sheet Steel

ASTM INTERNATIONAL (ASTM)

ASTM A1003/A1003M	(2013) Standard Specification for Steel Sheet, Carbon, Metallic- and Nonmetallic-Coated for Cold-Formed Framing Members
ASTM A1008/A1008M	(2012a) Standard Specification for Steel, Sheet, Cold-Rolled, Carbon, Structural, High-Strength Low-Alloy and High-Strength Low-Alloy with Improved Formability, Solution Hardened, and Bake Hardened
ASTM A1011/A1011M	(2012b) Standard Specification for Steel, Sheet, and Strip, Hot-Rolled, Carbon, Structural, High-Strength Low-Alloy and High-Strength Low-Alloy with Improved Formability and Ultra-High Strength
ASTM A123/A123M	(2012) Standard Specification for Zinc (Hot-Dip Galvanized) Coatings on Iron and Steel Products
ASTM A153/A153M	(2009) Standard Specification for Zinc Coating (Hot-Dip) on Iron and Steel Hardware
ASTM A370	(2012a) Standard Test Methods and Definitions for Mechanical Testing of Steel Products
ASTM A653/A653M	(2011) Standard Specification for Steel Sheet, Zinc-Coated (Galvanized) or Zinc-Iron Alloy-Coated (Galvannealed) by the Hot-Dip Process
ASTM C1007	(2011a) Standard Specification for Installation of Load Bearing (Transverse and Axial) Steel Studs and Related Accessories
ASTM C1513	(2013) Standard Specification for Steel Tapping Screws for Cold-Formed Steel Framing Connections
ASTM C955	(2011c) Load-Bearing (Transverse and Axial) Steel Studs, Runners (Tracks), and

	Bracing or Bridging for Screw Application of Gypsum Panel Products and Metal Plaster Bases
ASTM E119	(2012a) Standard Test Methods for Fire Tests of Building Construction and Materials
ASTM E329	(2013a) Standard Specification for Agencies Engaged in the Testing and/or Inspection of Materials Used in Construction
ASTM F1941	(2010) Standard Specification for Electrodeposited Coatings on Threaded Fasteners (Unified Inch Screw Threads (UN/UNR))
ASTM F1941M	(2007) Standard Specification for Electrodeposited Coatings on Threaded Fasteners (Metric)

1.2 SUBMITTALS

****

Government approval is required for submittals with a "G" designation; submittals not having a "G" designation are for Contractor Quality Control approval. When used, a designation following the "G" designation identifies the office that will review the submittal for the Government.

The following shall be submitted in accordance with Section 01 33 00 SUBMITTAL PROCEDURES:

SD-02 Shop Drawings

Framing Components; G

a. Cross sections, plans, and/or elevations showing component types and locations for each framing application; including shop coatings and material thicknesses for each framing component.

b. Connection details showing fastener type, quantity, location, and other information to assure proper installation.

c. Drawings depicting panel configuration, dimensions, components, locations, and construction sequence if the Contractor elects to install prefabricated/prefinished frames.

SD-03 Product Data

Steel studs,joists, tracks, bracing, bridging and accessories

[SD-05 Design Data

****

NOTE: Require calculations for items considered critical by the designer. The prescriptive design for blast resistance would not require engineering calculation however, the non-load

bearing wall will required design for vertical and lateral loads not associated with blast effects.

****

Metal framing calculations; G

SD-07 Certificates

Cold-formed metal framing

Mill certificates or test reports from independent testing agency, qualified in accordance with ASTM E329, showing that the steel sheet used in the manufacture of each cold-formed component complies with the minimum yield strengths and uncoated steel thickness specified. Test reports shall be based on the results of three coupon tests in accordance with ASTM A370.

Welds

Certified copies of welder qualifications test records showing qualification in accordance with AWS D1.3/D1.3M.

1.3 DELIVERY, STORAGE, AND HANDLING

Deliver materials to job site and store in adequately ventilated, dry locations. Storage area shall permit easy access for inspection and handling. If necessary to store materials outside, stack off the ground, support on a level platform, and protect from the weather as approved. Handle materials to prevent damage. Finish of the framing members shall be maintained at all times, using an approved high zinc dust content, galvanizing repair paint whenever necessary to prevent the formation of rust. Replace damaged items with new, as directed by the Contracting Officer. Steel framing and related accessories shall be stored and handled in accordance with the AISI S202, "Code of Standard Practice for Cold-Formed Steel Structural Framing".

1.4 COLD-FORMED METAL FRAMING

Include top and bottom tracks, bracing, fastenings, and other accessories necessary for complete installation. Framing members shall have the structural properties indicated. Where physical structural properties are not indicated, they shall be as necessary to withstand all imposed loads. Design framing in accordance with AISI SG03-3.

1.5 MAXIMUM DEFLECTION FOR NON-BLAST REALATED LOADS

****

a. Exterior Studs:

Deflection Criteria	Exterior Finish
L/360	Synthetic Plaster, Metal Panels
L/360	Cement Plaster, Wood Veneer

L/600	Brick Veneer, Stone Panels

Wall deflections shall be computed on the basis that studs withstand all lateral forces independent of any composite action from sheathing materials. Studs abutting windows or louvers shall also be designed not to exceed 6 mm 1/4 inch maximum deflection.

b. Floor Joists:

L/360 - Live load only
L/240 - Total load

c. Roof Rafters:

L/240 - Live load only

1.6 QUALITY ASSURANCE

a. Engineering Responsibility: Preparation of Shop Drawings, design calculations, and other structural data by a qualified professional engineer.

b. Professional Engineer Qualifications: A professional engineer who is legally qualified to practice in jurisdiction where project is located and who is experienced in providing engineering services of the kind indicated. Engineering services are defined as those performed for installations of cold-formed metal framing that are similar to those indicated for this project in material, design, and extent.

c. Testing Agency Qualifications: An independent testing agency, acceptable to authorities having jurisdiction, qualified according to ASTM E329 for testing indicated.

d. Product Tests: Mill certificates or data from a qualified independent testing agency indicating steel sheet complies with requirements, including base-metal thickness, yield strength, tensile strength, total elongation, chemical requirements, and metallic-coating thickness.

e. Welding Qualifications: Qualify procedures and personnel according to the following:

1. AWS D1.1/D1.1M, "Structural Welding Code - Steel".

2. AWS D1.3/D1.3M, "Structural Welding Code - Sheet Steel".

f. Fire-Test-Response Characteristics: Where indicated, provide cold-formed metal framing identical to that of assemblies tested for fire resistance per ASTM E119 by, and displaying a classification label from, a testing and inspecting agency acceptable to authorities having jurisdiction.

g. AISI Specifications and Standards: Comply with:

1. AISI S100, "North American Specification for the Design of Cold-Formed Steel Structural Members".

2. AISI S200, "North American Standard for Cold-Formed Steel Framing - General Provision".

3. AISI S201, "North American Standard for Cold-Formed Steel Framing - Product Data".

4. AISI S202, "Code of Standard Practice for Cold-Formed Steel Structural Framing".

5. AISI S211, "North American Standard for Cold-Formed Steel Framing - Wall Stud Design".

6. AISI S212, "North American Standard for Cold-Formed Steel Framing - Header Design".

7. AISI S213, "North American Standard for Cold-Formed Steel Framing - Lateral Design".

1.6.1 Drawing Requirements

Submit framing components to show sizes, thicknesses, layout, material designations, methods of installation, and accessories.

1.6.2 Design Data Required

Submit metal framing calculations to verify sizes, gages, and spacing of members and connections. Show methods and practices used in installation.

PART 2 PRODUCTS

2.1 STEEL STUDS, JOISTS, TRACKS, BRACING, BRIDGING AND

ACCESSORIES Framing components shall comply with ASTM C955 and

the following.

a. Recycled Content of Steel Products: Provide products with an average recycled content of steel products so postconsumer recycled content plus one-half of preconsumer recycled content not less than 25 percent.

b. Steel Sheet: ASTM A653/A653M, structural steel, zinc coated, of grade and coating as follows:

1. Grade: SS Grade 50, class 1

2. Coating: G90 (Z275).

c. Steel Studs: Manufacturer's standard C-shaped steel studs, of web depths indicated, punched, with stiffened flanges, and as follows:

1. Minimum Base-Metal Thickness: [0.84 mm 0.0329 inch] [1.09 mm 0.0428 inch] [1.37 mm 0.0538 inch] [2.45 mm 0.0966 inch].

2. Flange Width: [35 mm 1-3/8 inches] [41 mm 1-5/8 inches] [51 mm 2 inches]

3. Section Properties: Section modulus = [_____]; moment of inertia = [_____]; allowable moment = [_____].

d. Steel Track: Manufacturer's standard U-shaped steel track, of web depths indicated, unpunched, with straight flanges, and as

follows:

1. Minimum Base-Metal Thickness: [0.84 mm 0.0329 inch] [1.09 mm 0.0428 inch] [1.37 mm 0.0538 inch] [2.45 mm 0.0966 inch].

2. Flange Width: [38 mm 1-1/2 inches] [76 mm 3 inches].

2.2 MARKINGS

Studs and track shall have product markings stamped on the web of the section. The markings shall be repeated throughout the length of the member at a maximum spacing of 1200 mm 4 feet on center and shall be legible and easily read. The product marking shall include the following:

a. An ICC number.

b. Manufacturer's identification.

c. Minimum delivered uncoated steel thickness.

d. Protective coating designator.

e. Minimum yield strength.

2.3 CONNECTIONS

Screws for steel-to-steel connections shall be self-drilling, tapping screws in compliance with ASTM C1513 of the type, size and location as shown on the drawings. Electroplated screws shall have a minimum 5 micron zinc coating in accordance with ASTM F1941M ASTM F1941. Screws, bolts, and anchors shall be hot-dipped galvanized in accordance with ASTM A123/A123M or ASTM A153/A153M as appropriate. Screws bolts, and anchors shall be hot dipped galvanized in accordance with ASTM A123/A123M or ASTM A153/A153M as appropriate.

2.4 PLASTIC GROMMETS

Supply plastic grommets, recommended by stud manufacturer, to protect electrical wires. Prevent metal to metal contact for plumbing pipes.

PART 3 EXECUTION

3.1 FASTENING

Fasten framing members together by welding or by using self-drilling or self-tapping screws. Electrodes and screw connections shall be as required and indicated in the construction drawings and design calculations. The prescribed connection details for blast resistant exterior walls require only screwed connections however welded connections may be used in other areas.

3.1.1 Welds

All welding shall be performed in accordance with AWS D1.3/D1.3M, as modified by AISI SG02-KIT. All welders, welding operations, and welding procedures shall be qualified according to AWS D1.3/D1.3M. All welds shall be cleaned and coated with rust inhibitive galvanizing paint. Do not field weld materials lighter than 1.09 mm 18 gage.

3.1.2 Screws

Screws shall be of the self-drilling self-tappingtype, size, and location shown on the drawings. Screw penetration through joined materials shall not be less than three exposed threads.Minimum spacings and edge distances for screws shall be as specified in AISI SG02-KIT. Screws covered by sheathing materials shall have low profile heads.

3.1.3 Anchors

Anchors shall be of the type, size, and location shown on the drawings.

3.1.4 Powder-Actuated Fasteners

Powder-actuated fasteners shall be of the type, size, and location shown on the drawings.

3.2 INSTALLATION

Install cold-formed framing in accordance with ASTM C1007 and AISI S200.

Install cold-formed steel framing according to AISI S202 and to manufacturer's written instructions unless more stringent requirements are indicated.

3.2.1 Tracks

Provide accurately aligned runners at top and bottom of partitions. Anchor tracks as indicated in design drawings. Butt weld joints in tracks or splice with stud inserts. Fasteners shall be at least 75 mm 3 inches from the edge of concrete slabs.

3.2.2 Studs

Cut studs square and set with firm bearing against webs of top and bottom tracks. Position studs vertically in tracks and space as indicated in design. Do not splice studs. Provide at least two studs at jambs of doors and other openings 600 mm 2 feet wide or larger. Provide jack studs over openings, as necessary, to maintain indicated stud spacing. Provide tripled studs at corners, positioned to receive interior and exterior finishes. Fasten studs to top and bottom tracks by welding or screwing both flanges to the tracks. Framed wall openings shall include headers and supporting components as shown on the drawings. Headers shall be installed in all openings that are larger than the stud spacing in a wall. In curtain wall construction, provide for vertical movement where studs connect to the structural frame. Provide horizontal bracing in accordance with the design calculations and AISI SG03-3, consisting of, as a minimum, runner channel cut to fit between and welded to the studs or hot- or cold-rolled steel channels inserted through cutouts in web of each stud and secured to studs with welded clip angles. Bracing shall be not less than the following:

LOAD	HEIGHT	BRACING
Wind load only	Up to 3000 mm 10 feet	One row at mid-height
	Over 3000 mm 10 feet	Rows 1500 mm 5'-0" o.c. maximum

Axial load	Up to 3000 mm 10 feet	Two rows at 1/3 points
	Over 3000 mm 10 feet	Rows 900 mm 3'-4" o.c. maximum

3.2.3 Joists and Trusses

Locate each joist or truss directly above a stud. Provide doubled joists under parallel partitions wherever partition length exceeds 1/2 of joist span. Joists shall have at least 60 mm 2.50 inches of bearing on steel, 100 mm 4 inches on masonry, and shall be reinforced over bearings where required to prevent web crippling. Splice joists over bearings only. Lap and weld splices as indicated. Provide manufacturer's standard bridging which shall not be less than the following:

CLEAR SPAN	BRIDGING
Up to 4200 mm 14 feet	One row near center
4200 mm to 6000 mm 14 to 20 feet	Two rows at 1/3 points
6000 mm to 7800 mm 20 to 26 feet	Three rows at 1/4 points
7800 mm to 10600 mm 26 to 32 feet	Four rows at 1/5 points

Temporary bracing shall be provided and remain in place until work is permanently stabilized.

3.2.4 Erection Tolerances

a. Framing members which will be covered by finishes such as wallboard, plaster, or ceramic tile set in a mortar setting bed, shall be within the following limits:

(1) Layout of walls and partitions: 6 mm 1/4 inch from intended position;

(2) Plates and runners: 6 mm in 2400 mm 1/4 inch in 8 feet from a straight line;

(3) Studs: 6 mm in 2400 mm 1/4 inch in 8 feet out of plumb, not cumulative; and

(4) Face of framing members: 6 mm in 2400 mm 1/4 inch in 8 feet from a true plane.

b. Framing members which will be covered by ceramic tile set in dry-set mortar, latex-portland cement mortar, or organic adhesive shall be within the following limits:

(1) Layout of walls and partitions: 6 mm 1/4 inch from intended position;

(2) Plates and runners: 3 mm in 2400 mm 1/8 inch in 8 feet from a straight line;

(3) Studs: 3 mm in 2400 mm 1/8 inch in 8 feet out of plumb, not

cumulative; and

(4) Face of framing members: 3 mm in 2400 mm 1/8 inch in 8 feet from a true plane.

-- End of Section --

Appendix C

C. 1 WALL CONSTRUCTION DETAILS. The original CAD (*.dwg) drawings for Figures C.1 through C.8 are available on the Whole Building Design Guide Web site http://www.wbdg.org/ccb/.....

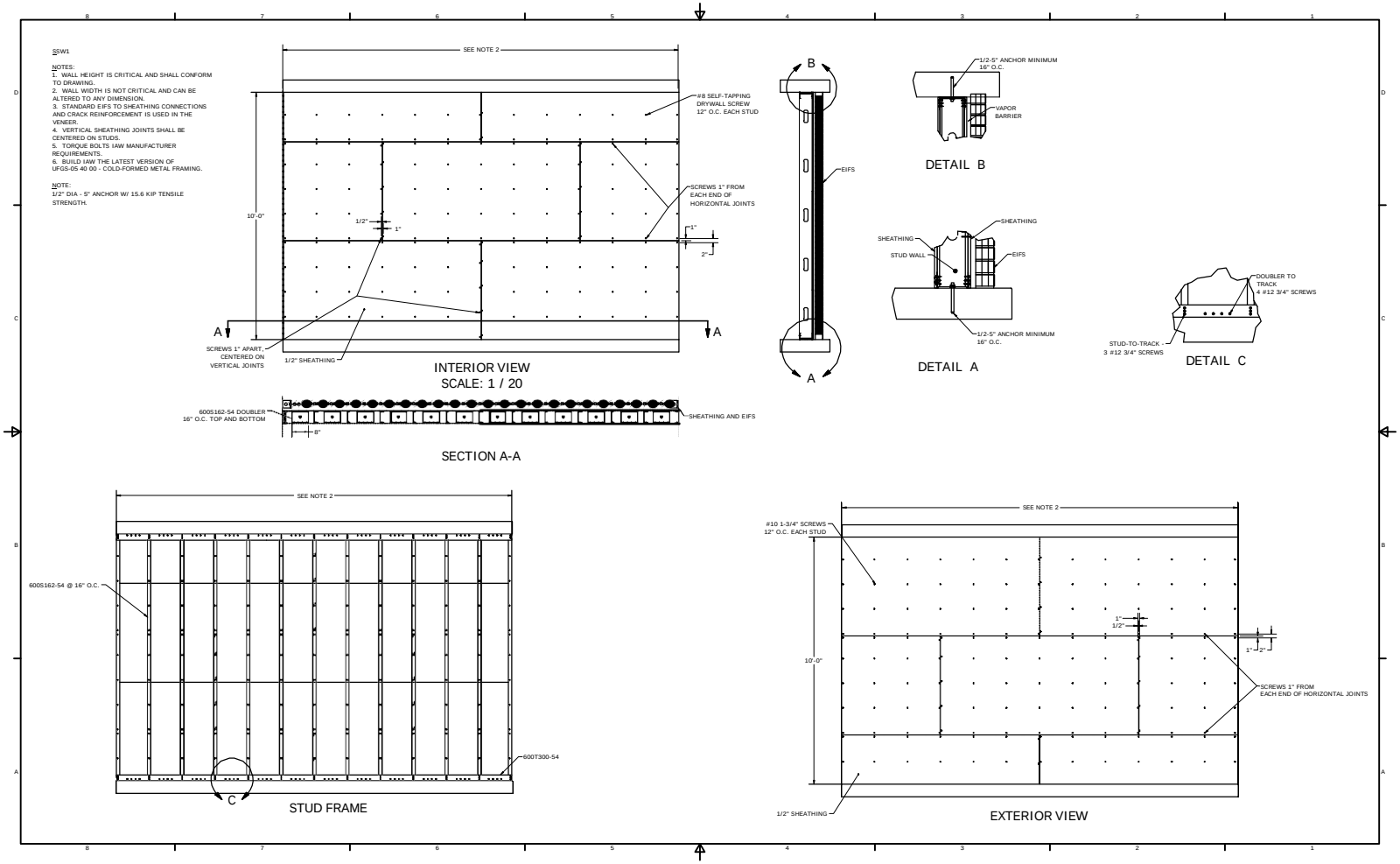

Figure C.1 SSW1

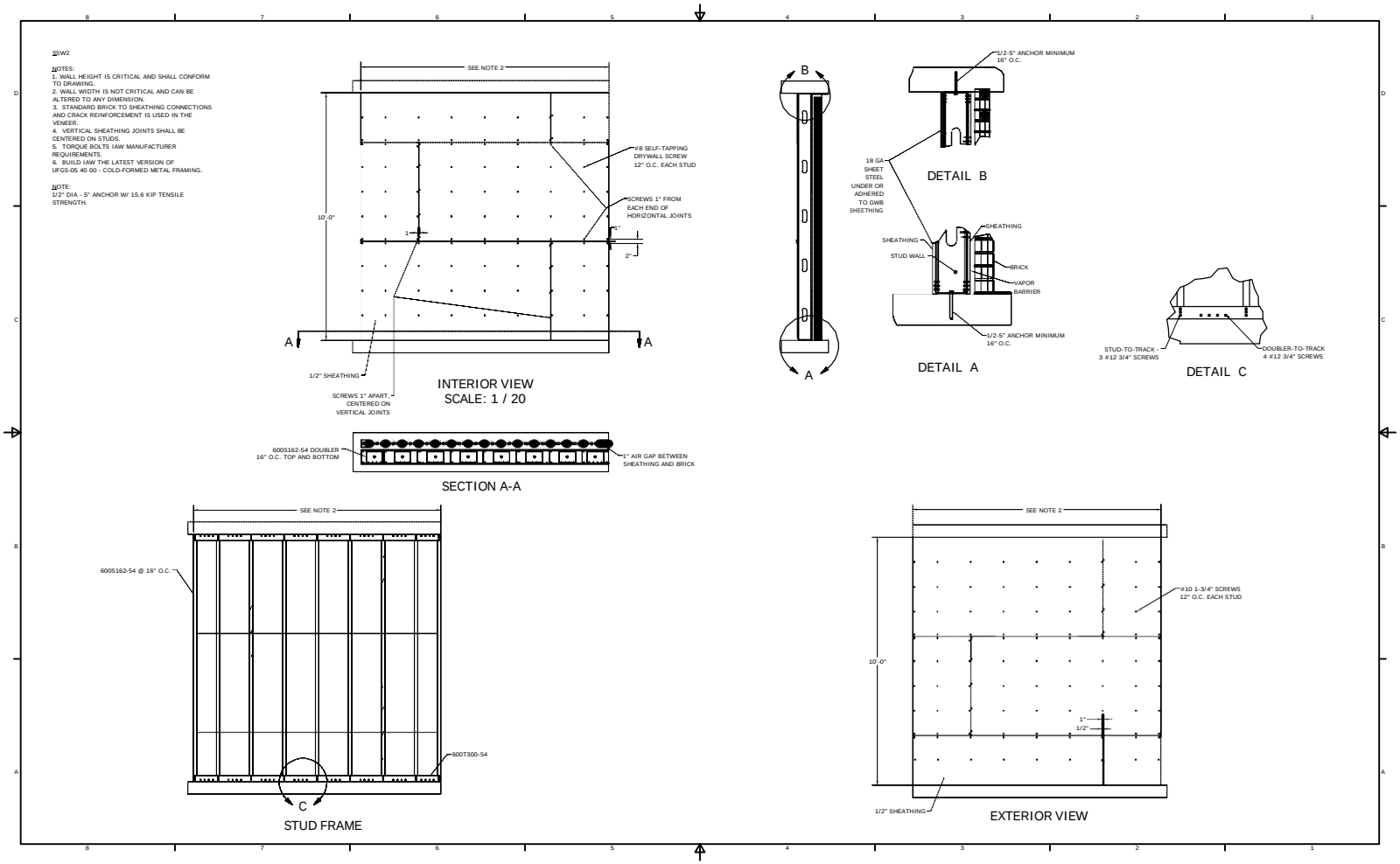

Figure C.2 SSW2

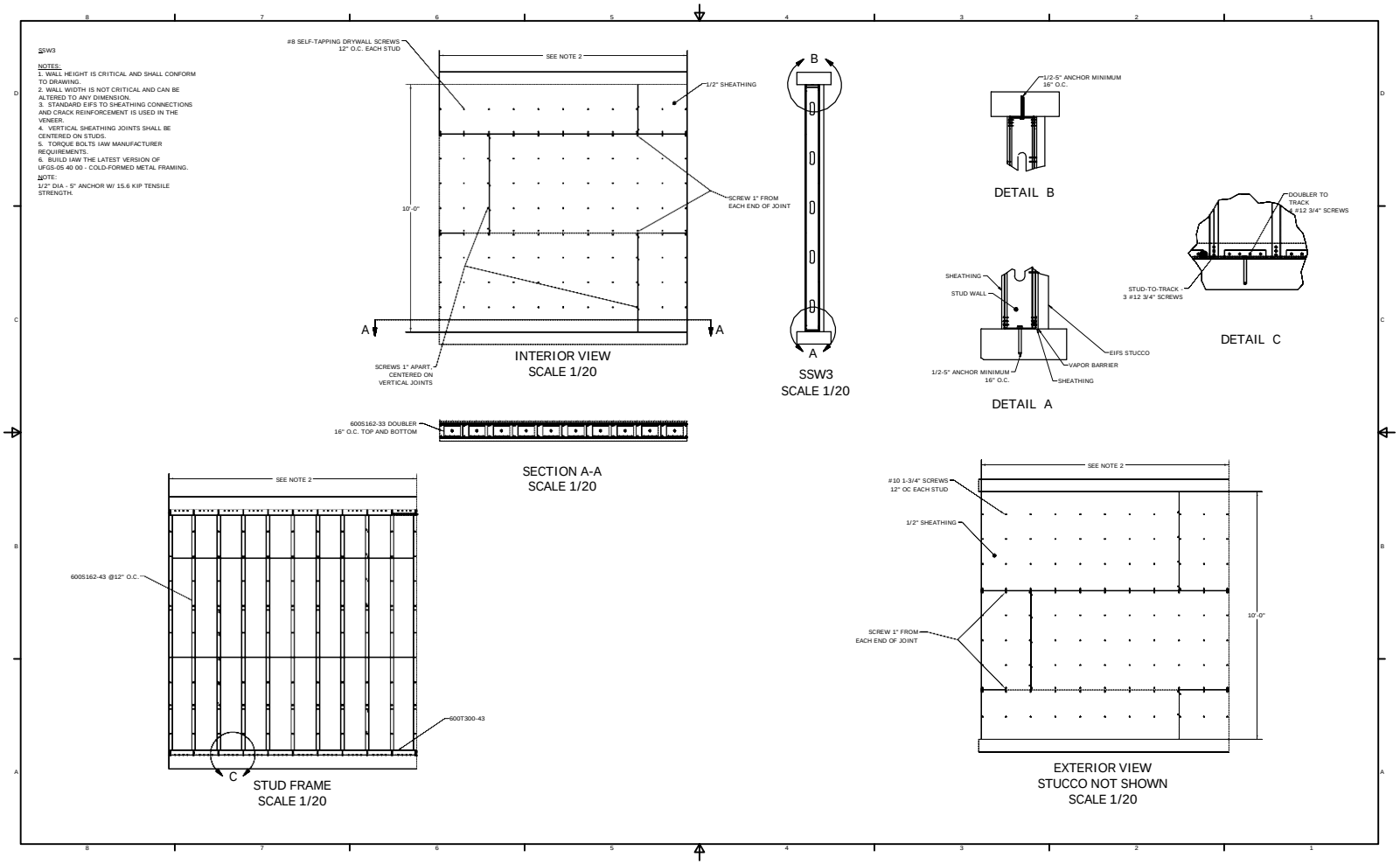

Figure C...3 SSW3

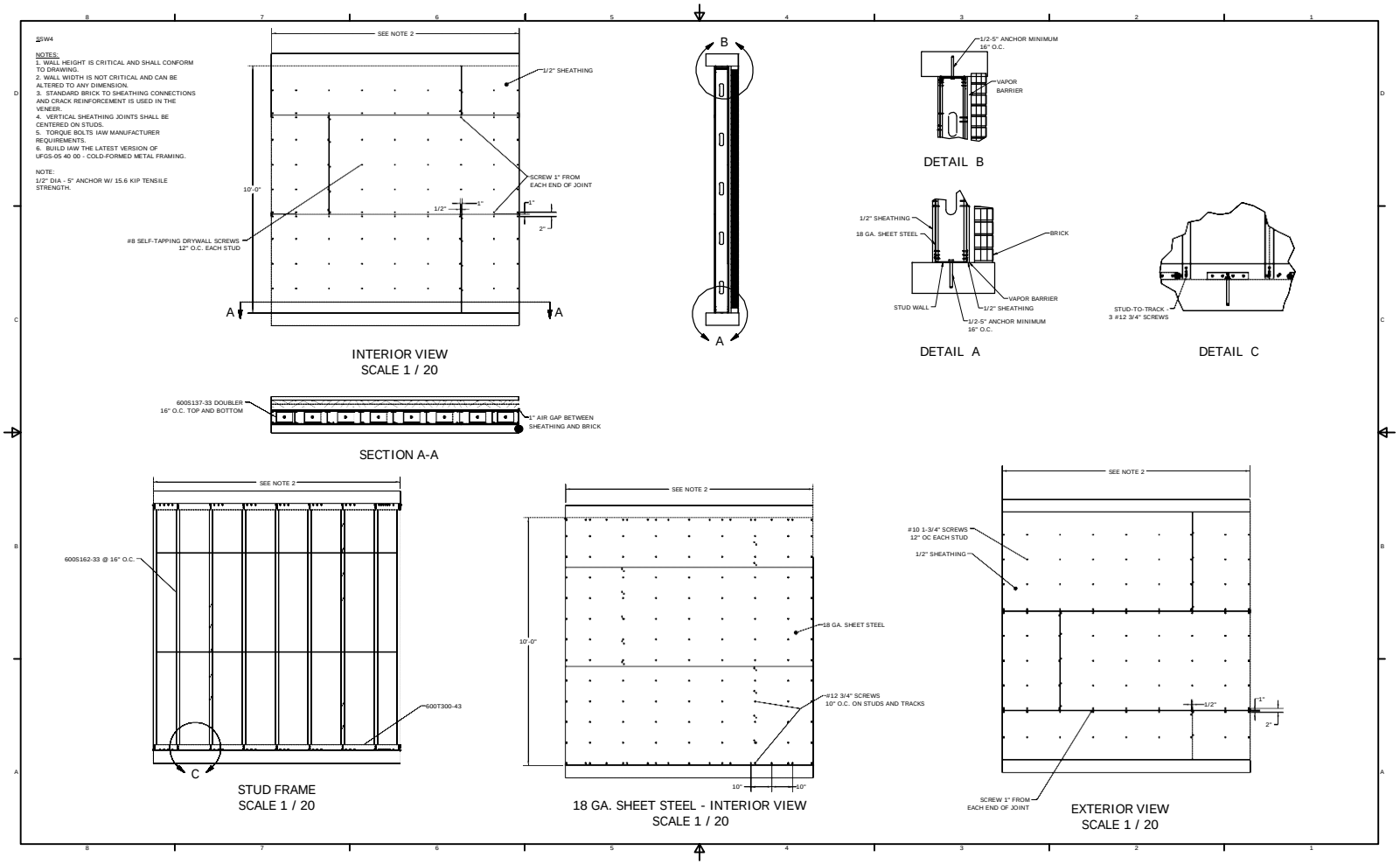

Figure C.4 SSW4

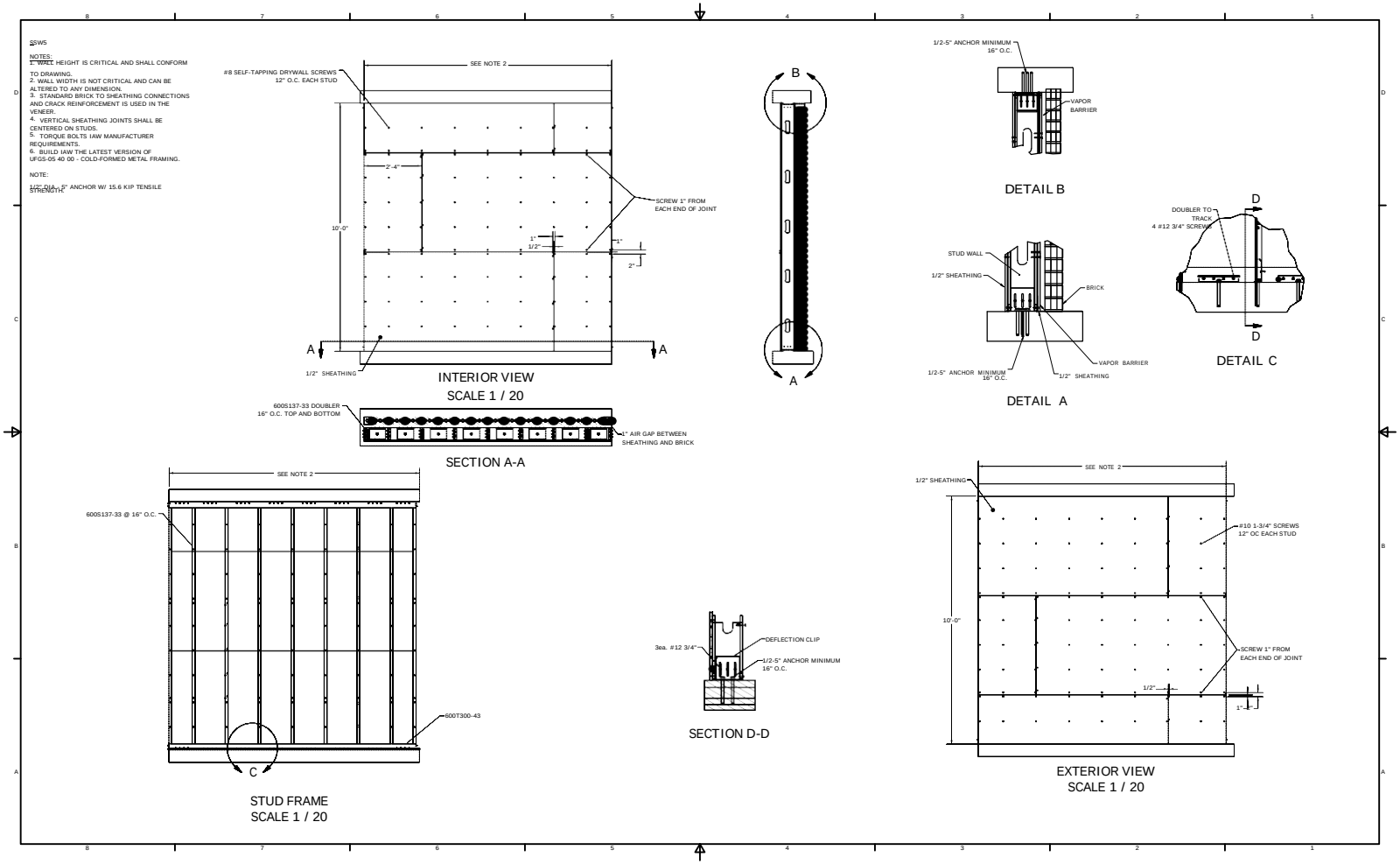

Figure C.5 SSW5

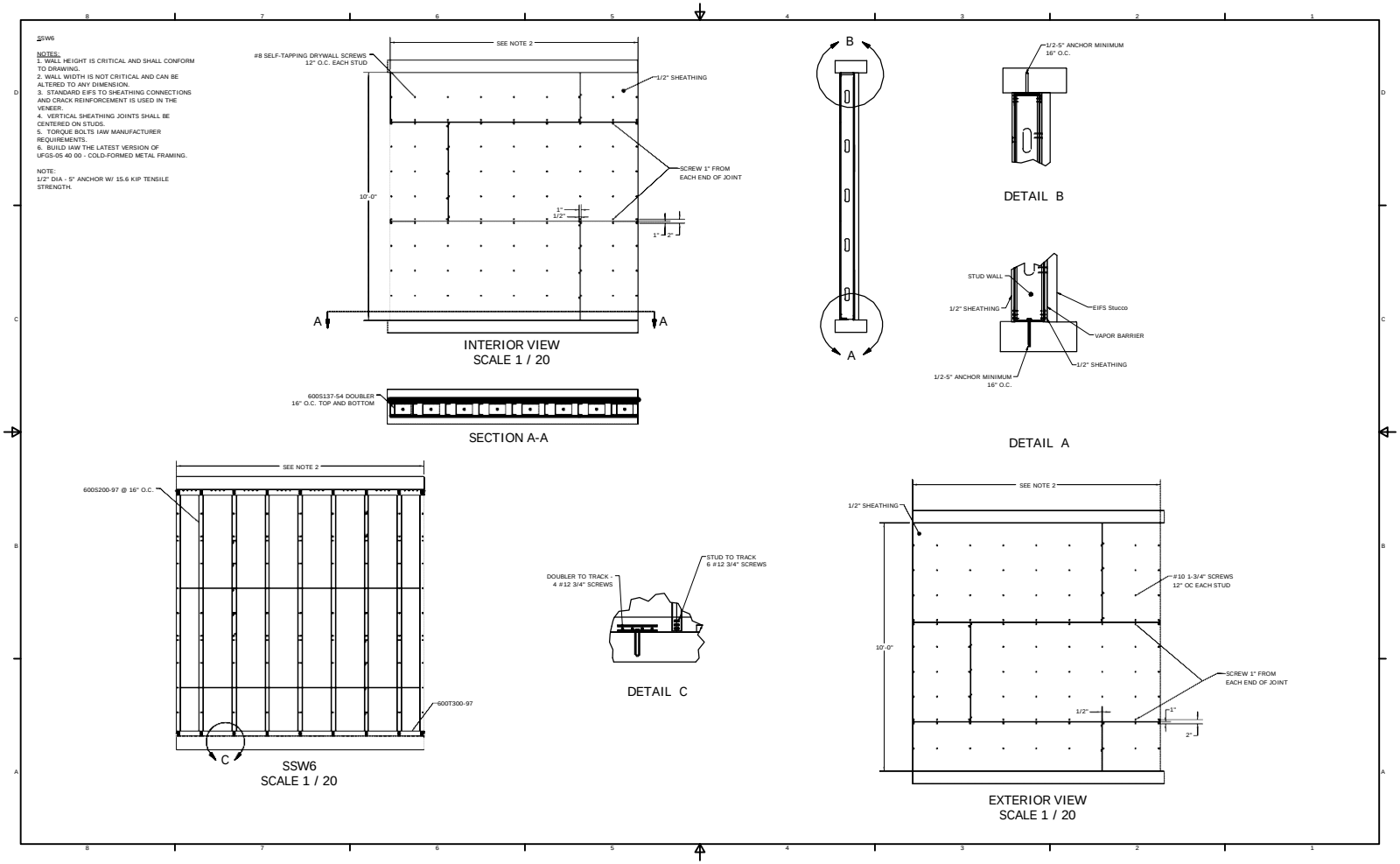

Figure C.6 SSW6

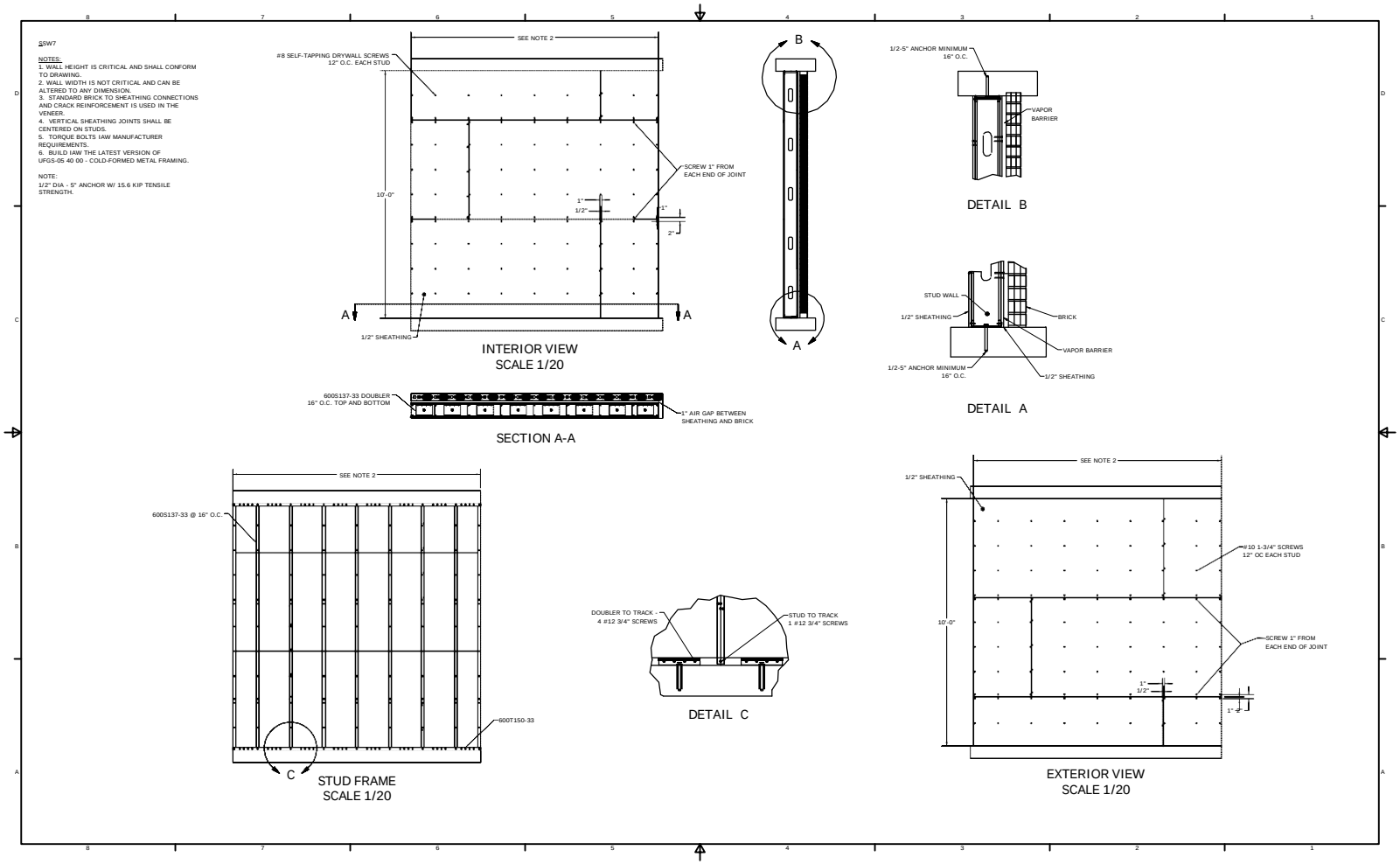

Figure C.7 SSW7

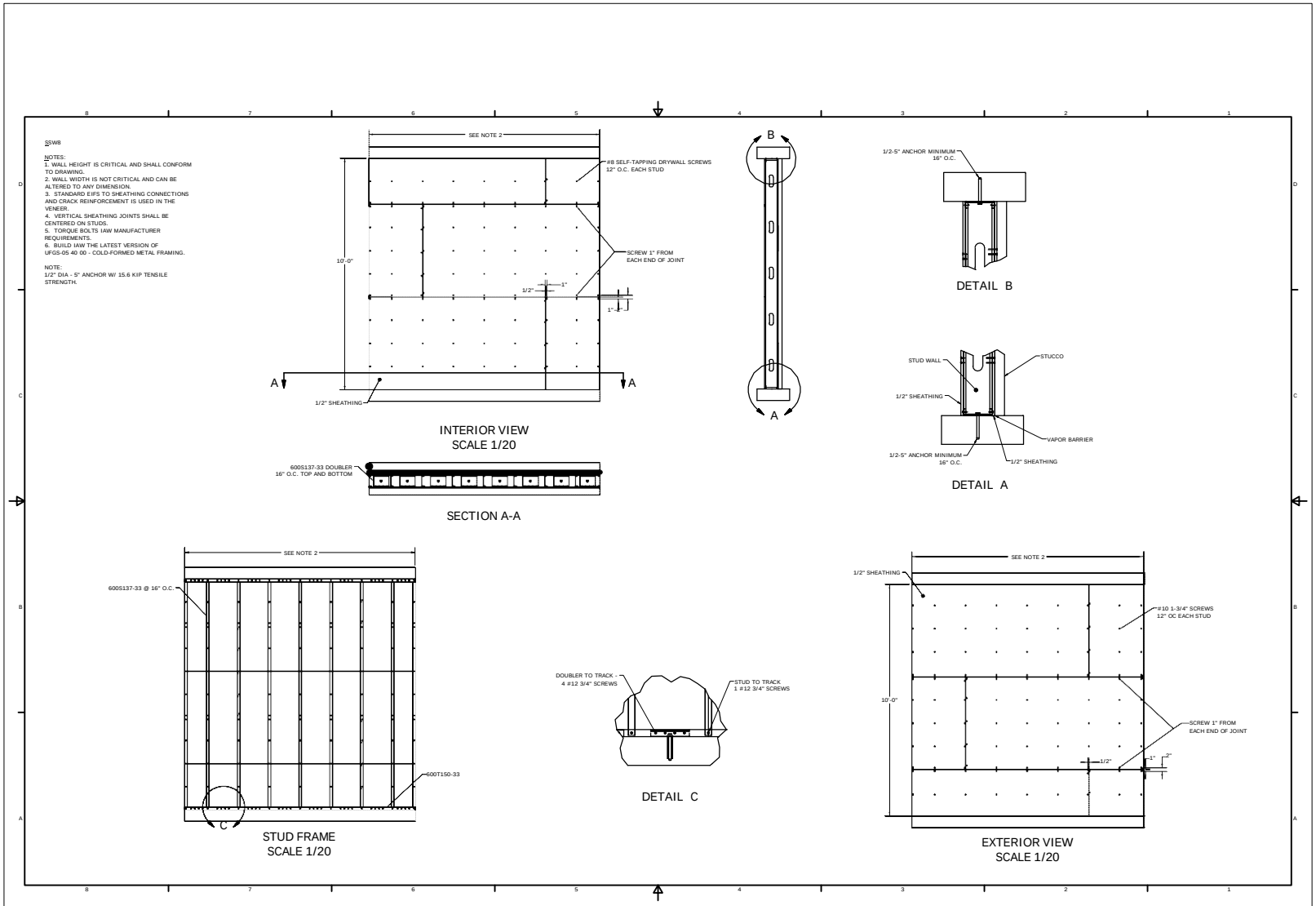

Figure C.8 SSW8

This page intentionally left blank.

PDC-TR 15-01
August 2015

U.S. Army Engineer Corps of Engineers
Protective Design Center
(Attn: CENWO-ED-S)
1616 Capitol Ave, Ste 9000
Omaha, NE 68102-4901

402-995-2366
PDC.Web@usace.army.mil

DISTRUBTION STATEMENT A:
Approved for public release: Distribution Unlimited